FERRY FARM PHASE 1 IMPROVEMENTS

M&O BUILDING

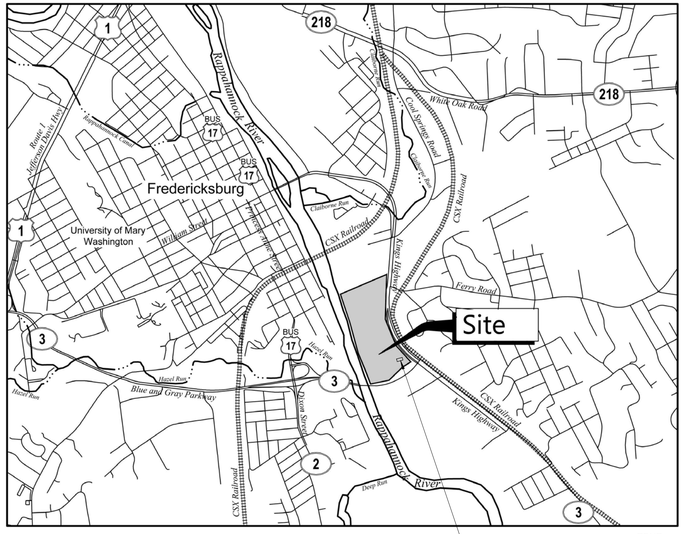

1 G-001 VICINITY MAP
N.T.S.

OWNER:

THE GEORGE WASHINGTON FOUNDATION

PRIME:

QUINN EVANS ARCHITECTS

2121 WARD PLACE, NW
FOURTH FLOOR
WASHINGTON, DC 20036

v 202 298 6700
f 202 298 6666

WWW.QUINNEVANS.COM

Civil Engineer

VANASSE HANGEN BRUSTLIN, INC.

115 South 15th Street
Suite 200
Richmond, VA 23219

P: 804.343.7100
F: 804.343.1713
www.vhb.com

Structural Engineer

WOODS PEACOCK ENGINEERING CONSULTING INC.

5250 Cherokee Avenue Suite 420
Alexandria, VA 22312

P: 703.658.4400
F: 703.658.4404
http://www.woodspeacock.com

MEP Engineer

MUELLER ASSOCIATES INC.

1401 South Edgewood Street
Baltimore, MD 21227

P: 410.646.4500
F: 410.646.4738
www.muellerassoc.com

SHEET INDEX

Sheet Number	Sheet Name
GENERAL	
G-001	TITLE SHEET
G-002	GENERAL NOTES & SYMBOLS
G-003	CODE, EGRESS & LIFESAFETY
ARCHITECTURE	
A-001	ABBREVIATIONS AND KEYNOTES
A-100	SITE PLAN
A-101	PLANS & ADA DETAILS
A-102	RCP & ROOF PLAN
A-201	ELEVATIONS
A-202	BUILDING & WALL SECTIONS
A-301	DETAILS
A-401	SCHEDULES
STRUCTURAL	
S-001	STRUCTURAL NOTES
S-002	STRUCTURAL NOTES
S-003	SPECIAL INSPECTION NOTES
S-004	SPECIAL INSPECTION NOTES
S-005	SPECIAL INSPECTION NOTES
S-101	FOUNDATION PLAN
S-102	SLAB ON GRADE PLAN
S-501	SECTIONS & DETAILS
S-502	SCHEDULES, SECTIONS & DETAILS
S-503	SECTIONS & DETAILS
MECHANICAL	
M-001	MECHANICAL LEGEND
M-100	FIRST FLOOR - HVAC
M-300	MECHANICAL DETAILS
M-400	ATC SCHEMATICS
M-500	SCHEDULES
ELECTRICAL	
E-001	ELECTRICAL LEGEND
E-100	FIRST FLOOR - POWER
E-200	FIRST FLOOR - LIGHTING
E-300	FIRST FLOOR - FIRE ALARM
E-400	SCHEDULES
E-500	SCHEDULES
PLUMBING	
P-100	FIRST FLOOR - PLUMBING
P-500	SCHEDULES & DETAILS
P-501	PLUMBING RISERS

DESIGN CRITERIA

Designed in Compliance with Virginia Uniform Statewide Building Code, 2009

Use and Occupancy Classification:
Factory Industrial Group F-1, moderate hazard
Business Group B
Storage Group S-1, moderate hazard
(Mixed Use, Non-Seperated)

Building Construction Classification:
Metal Frame building exterior, CMU and gypsum interior walls, metal roof. No fire resistance rating requirements for building elements.
Type IIB

Design Building Area and Height*:
1 Story Above Grade - 5,015 sf

Allowable Building Heights and Areas per Table 503:
F-1 – 2 Stories, 15,500 sf
B – 3 Stories, 23,000 sf
S-1 – 2 Stories, 17,500 sf

***Building Area** The area included within surrounding exterior walls (or exterior walls and fire walls) exclusive of vent shafts and courts. Areas of the building not provided with surrounding walls shall be included in teh building area if such areas are included iwthin the horizontal projection of the roof or floor above. (IBC 2009 502.1 Definitions.)*
***Additional Information:** Total area including all overhangs and exterior wall thickness = 6580 sf*

Occupant Load(s)

Occupancy Classification	Function of Space	Floor Area in SF per Occupant (Table 1004.1.1)	Area	Occupants	Total Occupants by Classification
F-1	Industrial	100 gross	2100 sf	21	21
B	Business Areas	100 gross	1160 sf	13	13
S-1	Warehouse	500 gross	980 sf	2	5
	Mechanical Room	300 gross	670 sf	3	
TOTAL					**39****

**Actual occupancy not anticipated to exceed 10.

Capacity of Means of Egress:
2 Doors @ 34" clear each and 2 doors @ 40" clear each = 148"

Fire Sprinkler: Not required.
Fire Alarm and Detection Systems: Not required.
Fire Protection: Portable Fire Extinguishers complying with Section 906

QUINN EVANS ARCHITECTS

2121 WARD PLACE, NW
FOURTH FLOOR
WASHINGTON, DC 20007

v 202 298 6700
f 202 298 6666

WWW.QUINNEVANS.COM

FERRY FARM PHASE 1 IMPROVEMENTS M&O BUILDING

268 Kings Hwy, Fredericksburg, VA 22405

QEA # 31402900

TITLE SHEET

BUILDING PERMIT SUBMISSION
06/30/15

REVISIONS

NO.	DESCRIPTION	DATE

G-001

6/29/2015 10:03:28 AM C:\Revit Local\M&O Buildings_mellerr.rvt

MATERIAL DESIGNATIONS

- EXISTING WALL TO REMAIN
- ELEMENTS TO BE REMOVED
- NEW CONCRETE
- CONTINUOUS WOOD BLOCKING
- DISCONTINUOUS WOOD BLOCKING
- NEW STEEL (LARGE SCALE)
- ALUMINUM
- NEW RIGID INSULATION
- NEW GWB / PLASTER
- NEW GLASS
- NEW PLYWOOD
- NEW WOOD
- BATT INSULATION

SYMBOLS

- Room name / 10001 — ROOM NUMBER / FINISH TYPE
- 101 — DOOR NUMBER
- XX — WALL TYPES
- XX — WINDOW NUMBER
- EXISTING ELEVATION
- NEW ELEVATION
- WORK POINT
- FD — FLOOR DRAIN
- RECESSED LIGHT FIXTURE
- PENDANT LIGHT FIXTURE
- RETURN AIR GRILLE
- SUPPLY AIR REGISTER
- EXHAUST GRILLE
- XX-XX — KEYNOTE
- XX — MATERIAL DESIGNATION (REFER TO MATERIALS SCHED.).

DETAIL / PLAN

1 A101 — SIM — DRAWING REFERENCE — SHEET REFERENCE

BLDG SECTION CUT

1 A101 — SIM — DRAWING REFERENCE — SHEET REFERENCE

ELEVATION

1 A101 — SIM — DRAWING REFERENCE — SHEET REFERENCE

DETAIL CUT

1 A101 — SIM — DRAWING REFERENCE — SHEET REFERENCE

DOORS

NEW DOOR

WALL SECTION CUT

1 A101 — SIM — DRAWING REFERENCE — SHEET REFERENCE

PROJECT NORTH

TRUE NORTH

PROJECT NORTH

29° FROM TRUE NORTH

GENERAL NOTES

1. THESE NOTES ARE TO BE READ IN CONJUNCTION WITH ANY WRITTEN SPECIFICATIONS AND THESE DRAWINGS. IN THE EVENT OF CONFLICT BETWEEN THE INFORMATION ON THE DRAWINGS AND THE SPECIFICATIONS, THE MORE STRINGENT REQUIREMENT SHALL GOVERN.

2. THE FOLLOWING PHRASES ARE DEFINED AS FOLLOWS:

REMOVE: DISASSEMBLE, DISMANTLE OR DEMOLISH ITEM AND TRANSPORT FROM THE SITE.

REMOVE AND SALVAGE: DISMANTLE EXISTING MATERIALS OR ASSEMBLIES CAREFULLY; PROVIDE PROTECTION SUITABLE FOR MAINTAINING EXISTING CONDITIONS OF MATERIALS, AND STORE SALVAGED MATERIAL FOR REINSTALLATION.

REINSTALL: INSTALL EXISTING ITEMS WHICH HAVE BEEN REMOVED AND SALVAGED.

PROVIDE: FURNISH AND INSTALL NEW ITEM AS INDICATED.

COMPLETE/LY: 100% OF THE IDENTIFIED SURFACE PLANE: WALL TO WALL OR CORNER TO CORNER.

REPAIR: CUT AND REMOVE DAMAGED PORTION OF ITEM IDENTIFIED AND PATCH WITH NEW MATERIAL THAT MATCHES THE REMOVED ITEM IN MATERIAL, AND PROFILE UNLESS OTHERWISE NOTED.

TYPICAL: THE IDENTIFIED TREATMENT IS TO BE APPLIED AT ADDITIONAL LOCATIONTHROUGHOUT THE DRAWING WHERE SIMILAR CONDITIONS EXIST.

SIMILAR: THE REFERENCE DETAIL MUST BE MODIFIED TO MEET THE REQUIREMENTS OF THIS SPECIFIC LOCATION.

3. CONTRACTOR SHALL USE ALL REASONABLE AND CUSTOMARY CARE TO VERIFY ALL EXISTING CONDITIONS IN THE FIELD. CONTRACTOR SHALL NOTIFY THE ARCHITECT IMMEDIATELY OF INCONSISTANCIES BETWEEN THESE DRAWINGS AND THE ACTUAL CONDITIONS BEFORE PROCEEDING WITH CONSTRUCTION.

4. UNLESS OTHERWISE NOTED, NOMINAL FLOOR ELEVATIONS GIVEN ON ARCHITECTURAL PLANS ARE TO HARD SURFACES INCLUDING: TOPPING OR CONCRETE SLABS.

5. THESE DRAWINGS ARE NOT TO BE SCALED FOR THE PURPOSE OF LAYING OUT DEMOLITION OR NEW WORK. USE FIGURED DIMENSIONS ONLY.

6. THE MASTER KEYNOTE LIST SUPERSEDES ALL KEYNOTES THAT APPEAR ON DRAWING SHEETS.

7. CLEAN JOB SITE REMOVING SCAPRS, DEBRIS AND WASTE MATERIALS DAILY.

8. MANUFACTURER'S WRITTEN RECOMMENDATIONS FOR INSTALLATION ARE TO BE FOLLOWED FOR ALL ITEMS UNLESS SPECIFICALLY STATED OTHERWISE IN THE DRAWINGS OR SPECIFICATIONS.

9. PROVIDE BLOCKING IN WALLS, ANCHORS, AND FASTENERS AS REQUIRED BY SPECIFIC PRODUCT SUPPLIERS TO WITHSTAND SPECIFIC LOADS AND TO ALLOW FOR REQUIRED MOVEMENT. SUCHITEMS REQUIRING LOCKING INCLUDLE BUT ARE NOT LIMITED TO: TOILET ACCESSORIES, TOILETPARTITIONS, AND WALL-MOUNTED PLUMBING FIXTURES AND HANDRAILS.

10. THE CONTRACTOR IS SOLELY RESPONSIBLE FOR SEQUENCING ALL WORK AND FOR COORDINATION OF ALL SUBCONTRACTORS. REINSTALLATION OF ANY WORK INSTALLED THAT HAS NOT BEEN COORDINATED AND HAS TO BE REINSTALLED SHALL BE DONE AT THE CONTRACTOR'S EXPENSE.

11. ALL DIFFUSERS, REGISTERS, ELECTRICAL FIXTURES AND DEVICES SHALL BE CENTERED ON CEILING PANELS OR AREAS , UNLESS OTHERWISE NOTED. REFER TO MECHANICAL, ELECTRICAL, AND FIRE PROTECTION DRAWINGS FOR FIXTURES.

12. THE CONTRACTOR'S EQUIPMENT AND STAGING SHALL NOT BLOCK BUILDING EXITS, NOR LIMIT ACCESS TO THE STRUCTURE BY THE FIRE DEPARTMENT IN THE EVENT OF AN EMERGENCY. CONTRACTOR IS STRICTLY LIMITED TO THE TEMPORARY CONSTRUCTION EASEMENT IDENTIFIEON CIVIL DWGS.

13. PARKING OF CONTRACTOR VEHICLES AND MATERIAL DELIVERIES ARE STRICTLY LIMITED TO THE STAGING AREAS TO BE IDENTIFIED BY OWNER. NO VEHICLE PARKING OR THROUGH TRAFFIC WILL BE PERMITED IN THE ALLEY BEHIND THE BUILDING. REFER TO SPECIFICATION SECTION 015000, "TEMPORARY FACILITES AND CONTROLS" FOR STAGING REQUIREMENTS.

14. POSITIVE SITE DRAINAGE AWAY FROM THE BUILDING SHALL BE MAINTAINED DURING ALL PHASES OF CONSTUCTION. PONDING OR STANDING WATER WILL NOT BE PERMITTED.

15. DIMENSIONS FOR INTERIOR PARTITIONS ON PLANS AND RCPS ARE TO CENTER LINE OF WALL UNLESS NOTED OTHERWISE.

QUINN EVANS ARCHITECTS

2121 WARD PLACE, NW
FOURTH FLOOR
WASHINGTON, DC 20007

v 202 298 6700
f 202 298 6666

WWW.QUINNEVANS.COM

FERRY FARM PHASE 1 IMPROVEMENTS M&O BUILDING

268 Kings Hwy, Fredericksburg, VA 22405

QEA # 31402900

GENERAL NOTES & SYMBOLS

BUILDING PERMIT SUBMISSION
06/30/15

REVISIONS

NO.	DESCRIPTION	DATE

G-002

6/29/2015 10:03:29 AM C:\Revit Local\M&O Buildings_matteo.rvt

EXIT REQUIREMENTS

NUMBER AND ARRANGEMENT OF EXITS

FLOOR, ROOM OR SPACE DESIGNATION	MINIMUM[2] NUMBER OF EXITS		TRAVEL DISTANCE	
	REQUIRED	SHOWN ON PLANS	ALLOW. TRAV. DIST. (Table 1016.1)	ACTUAL TRAV. DISTANCE SHOWN
GROUND FLOOR	**2**	**4**	**200'**	**72**

1. Corridor Dead Ends (Section 1018.4)
2. Single Exits (Table 1021.2) (Table 1021.1)
3. Common Path of Travel (Section 1014.3)

EXIT WIDTHS

USE GROUP OR SPACE DESCRIPTION	(A)	(B)		(C)		EXIT WIDTH (IN.)			
	AREA[1] (SQ. FT.)	AREA[1] PER OCCUPANT (Table 1004.1.2.)	OCCUP. LOAD	EGRESS WIDTH PER OCCUPANT (Table 1005.1)		REQUIRED WIDTH (Section 1005.1) (A B) x C		ACTUAL WIDTH SHOWN ON PLANS	
				STAIR	OTHER	STAIR	OTHER	STAIR	OTHER
GROUND FLOOR	**See Chart**	**See Chart**	**40**	**NA**	**.2**	**See Chart**	**See Chart**	**See Chart**	**See Chart**

1. Minimum stairway width (Section 1009.1); minimum corridor width (Section 1016.2); minimum door width (Section 1008.1.1)
2. Minimum width of exit passageway (Section 1020.2)
3. The loss of one means of egress shall not reduce the available capacity to less than 50 percent of the total required. (Section 1005.1)

OCCUPANCY - BY ROOM

Number	Name	Occupancy Type	Function of Space	Area	Occupants by Room
101	Work Area	B	Business Area (100 gross)	201.69 SF	2
102	Office	B	Business Area (100 gross)	77.81 SF	1
103	Map & File	B	Business Area (100 gross)	76.82 SF	1
104	Break Room	B	Business Area (100 gross)	303.33 SF	3
105	Corridor	B	Business Area (100 gross)	316.72 SF	3
106	ADA Restroom 1	B	Business Area (100 gross)	70.67 SF	1
107	ADA Restroom 2	B	Business Area (100 gross)	67.34 SF	1
108	Receiving / Staging	S-1	Warehouse (500 gross)	745.55 SF	2
109	Event Storage	S-1	Warehouse (500 gross)	170.07 SF	1
110	Janitors Closet	S-1	Accessory Storage (300 gross)	216.63 SF	1
111	MEP Parts Storage	S-1	Accessory Storage (300 gross)	157.79 SF	1
112	Mechanical Room	S-1	Mechanical (300 gross)	265.79 SF	1
113	Electrical Room	S-1	Mechanical (300 gross)	Not Placed	1
114	Pass Through Work Bay	F-1	Industrial (100 gross)	666.01 SF	7
115	Small Bay Equipment Storage	F-1	Industrial (100 gross)	704.07 SF	7
116	Paint / Carpentry Worshop	F-1	Industrial (100 gross)	679.18 SF	7
X01	Exterior Covered Loading			648.47 SF	

Egress Capacity

Mark	Width	Max Egress Occupant
001	3' - 0"	210
002	3' - 0"	200
003	3' - 0"	180
004	3' - 0"	180
005	3' - 0"	180
007	3' - 0"	180
008	3' - 0"	180
009	4' - 0"	240
010	4' - 0"	240
011	3' - 0"	180
012	3' - 0"	180
013	3' - 0"	180
014	3' - 0"	180
015	3' - 0"	180
016	3' - 0"	180
017	3' - 0"	180
018	3' - 0"	180

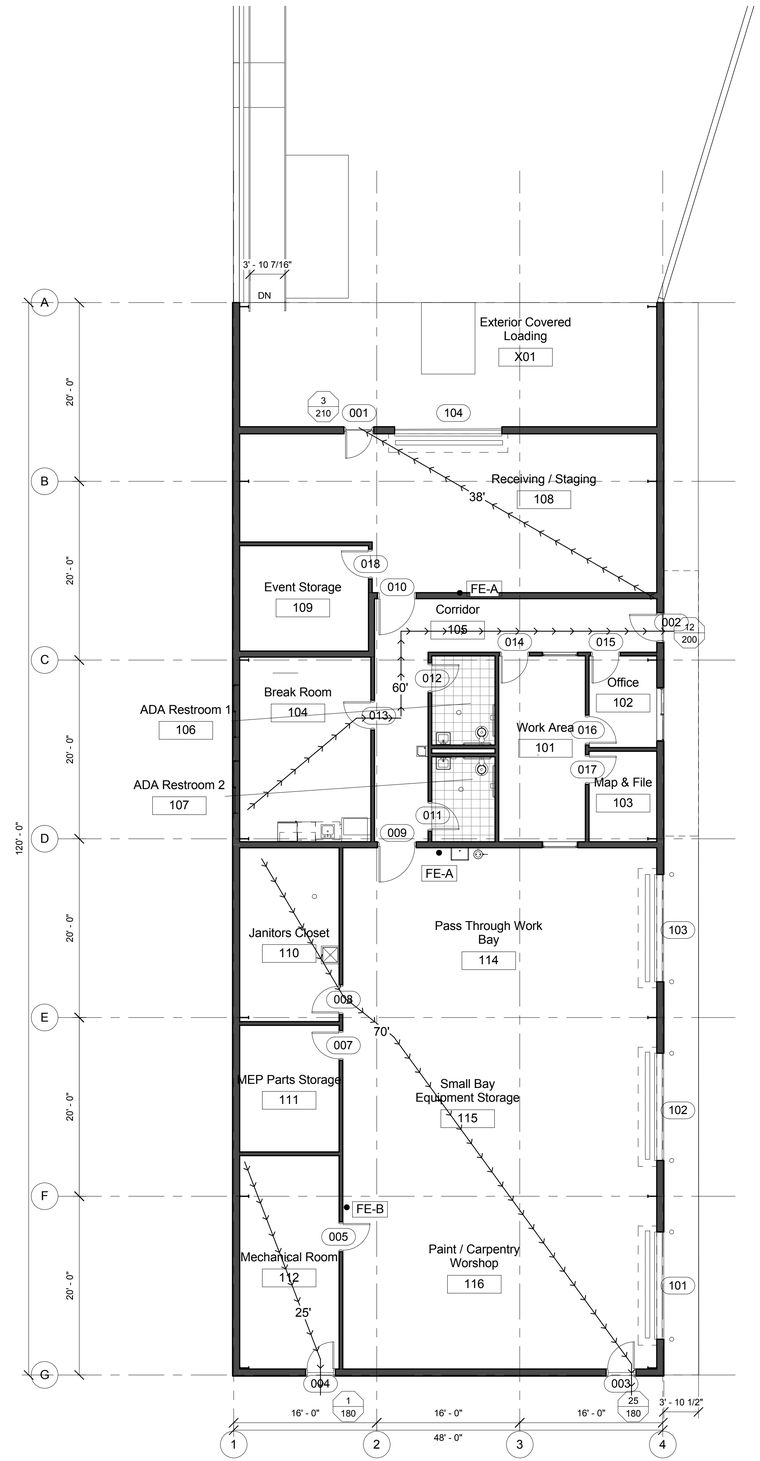

1 G-003 GROUND FLOOR EGRESS PLAN

1/8" = 1'-0"

GENERAL INFORMATION

Building Construction Classification:
Type IIB

Use and Occupancy Classification:
Factory Industrial Group F-1, moderate hazard
Business Group B
Storage Group S-1, moderate hazard
(Mixed Use, Non-Seperated)

Design Building Area and Height:
1 Story Above Grade - 5,015 sf

Overall Occupant Load:
39

Fire Sprinkler: Not required.
Fire Alarm and Detection Systems: Not required.
Fire Protection: Portable Fire Extinguishers complying with Section 906

Smoke Detection: Smoke Detectors in drop ceilings.
Panic Hardware: Not required.

NOTES

1. See A-100 for location of proposed fire hydrants.
2. See E-200 for locations of emergency lighting and exit signs. Emergency lighting will be powered by battery backup.

EGRESS LEGEND

XXX / XXX — NUMBER OF PEOPLE USING EXIT / EXIT CAPACITY

TRAVEL PATH ARROW

FIRE EXTINGUISHERS
Per NFPA 10 Section 5.2

FE-A — Class A fires - Ordinary Hazard. Minimum 2-A Rating - 75' max. travel. Class A fires are ordinary combustible matericals, such as wood, cloth, paper, rubber, and many plastics.

FE-B — Class B Fires - Light Hazard. Minimum 10-B Rating - 30' max. travel. Class B fires are flammable liquids combustible liquids, petroleum greases, tars, oils, oil-based paints, solvents, lacquers, alcohols, and flammable gases.

PROJECT NORTH

SEE G-002

8' 0' 8' 16'

1/8" = 1' - 0" SCALE OF FEET

QUINN EVANS ARCHITECTS

2121 WARD PLACE, NW
FOURTH FLOOR
WASHINGTON, DC 20007

v 202 298 6700
f 202 298 6666

WWW.QUINNEVANS.COM

FERRY FARM PHASE 1 IMPROVEMENTS M&O BUILDING

268 Kings Hwy, Fredericksburg, VA 22405

QEA # 31402900

CODE, EGRESS & LIFESAFETY

BUILDING PERMIT SUBMISSION
06/30/15

REVISIONS

NO.	DESCRIPTION	DATE

G-003

6/29/2015 10:03:30 AM C:\Revit Local\MAD Buildings_matten.rvt

ABBREVATIONS

A/C	AIR CONDITIONING
ABT	ABOUT
ACCESS	ACCESSIBLE
ACOUS	ACOUSTIC
ACP	ACOUSTICAL CEILING PANEL
AD	AREA DRAIN
ADA	AMERICANS WITH DISABILITIES ACT
ADD'L	ADDITIONAL
ADJ	ADJACENT/ADJUST
AFF	ABOVE FINISHED FLOOR
AGG	AGGREGATE
ALT	ALTERNATE
ALUM	ALUMINIUM
APPROX	APPROXIMATE(LY)
ARCH	ARCHITECT(URAL, URE)
ASPH	ASPHALT(IC)
ASSOC	ASSOCIATED
AUTO	AUTOMATIC
BD	BOARD
BIT	BITUMINOUS, BITUMEN
BLDG	BUILDING
BLKG	BLOCKING
BM	BEAM
BOT	BOTTOM
C	CONCRETE
CAB	CABINET
CEM	CEMENT
CJ	CONTROL JOINT
CLG	CEILING
CLR	CLEAR(ANCE)
CMU	CONCRETE MASONRY UNIT
COL	COLUMN
COM	COMMUNICATIONS
CONC	CONCRETE
COND	CONDITION
CONFIG(S)	CONFIGURATION(S)
CONST	CONSTRUCTION
CONTIN	CONTINUOUS
COORD	COORDINATE
CORR	CORRIDOR
CT	CERAMIC TILE
CTR	CENTER
D	DEEP/DEPTH
DEG	DEGREE
DF	DRINKING FOUNTAIN
DIAG	DIAGONAL
DIAM	DIAMETER
DIM(S)	DIMENSION(S)
DIV	DIVISION
DN	DOWN
DR	DOOR
DTL	DETAIL
DWG(S)	DRAWING(S)
E	EAST
EA	EACH
EJ	EXPANSION JOINT
EL	ELEVATION (TOPO)
ELEC	ELECTRICAL
EMER	EMERGENCY
ENCL	ENCLOS(E,URE)
EQ	EQUAL
EQUIP	EQUIPMENT
EST	ESTIMATE(D)
EXH	EXHAUST
EXHB	EXHIBIT
EXIST	EXISTING
EXP	EXPOSED, EXPANSION
EXT	EXTERIOR
FAS	FASTEN(ER)
FD	FLOOR DRAIN
FDN	FOUNDATION
FE	FIRE EXTINGUISHER
FEC	FIRE EXTINGUISHER CABINET
FF	FINISHED FACE
FGL	FIBERGLASS
FIN(S)	FINISH(ES)
FIXT	FIXTURE
FL	FLOOR(ING)
FLAM	FLAMMABLE
FLUOR	FLUORESCENT
FOC	FACE OF CONCRETE
FOS	FACE OF STUDS
FP	FIREPROOF(ING)
FR	FRAME(D,ING)
FT	FEET
FTG	FOOTING
FUR	FURR(ED,ING)
GA	GAUGE
GALV	GALVANIZED
GB	GRAB BAR
GC	GENERAL CONTRACT(OR)
GL	GLASS, GLAZING
GT	GROUT
GWB	GYPSUM WALLBOARD
H	HIGH
HC	HOLLOW CORE
HDR	HEADER
HDWR	HARDWARE
HGT	HEIGHT
HM	HOLLOW METAL
HORIZ	HORIZONTAL(LY)
HP	HIGH POINT
HR	HOUR
HT	HEIGHT(S)
HVAC	HEATING, VENTILATION & AIR CONDITIONING
ID	INSIDE DIAMETER
ILO	IN LIEU OF
IN	INCH(ES)
INCAN	INCANDESCENT
INCL	INCLUDE(S,D,ING)
INFO	INFORMATION
INSUL	INSULATION, INSULATED
INT	INTERIOR
IVA	IMPLIED VERTICAL ALIGNMENTS
JAN	JANITOR
JT(S)	JOINT(S)
KIT	KITCHEN
LAM	LAMINATE(D)
LAV	LAVATORY
LBL	LABEL
LH	LEFT HAND
LL	LIVE LOAD
LP	LOW POINT
LTG	LIGHTING
LTL	LINTEL
M&O	MAINTENANCE AND OPERATIONS
MAS	MASONRY
MATL	MATERIAL(S)
MAX	MAXIMUM
MECH	MECHANICAL
MED	MEDIUM
MEMB	MEMBRANE
MFR	MANUFACTURE(R)
MIN	MINIMUM
MISC	MISCELLANEOUS
MO	MASONRY OPENING
MTD	MOUNTED
MTG	MOUNTING
MTL	METAL
N	NORTH
NAT	NATURAL
NIC	NOT IN CONTRACT
NO('S)	NUMBER(S)
NOM	NOMINAL
NTS	NOT TO SCALE
OC	ON CENTER
OD	OUTSIDE DIAMETER
OFF	OFFICE
OH	OVERHEAD
OPNG	OPENING(S)
OPP	OPPOSITE
OPP HD	OPPOSITE HAND
ORIG	ORIGINAL
PAR	PARALLEL
PART	PARTITION(S)
PC	PRECAST
PERF	PERFORATE(D)
PL	PLATE
PLAM	PLASTIC LAMINATE
PLAS	PLASTER
PLWD	PLYWOOD
PNL	PANEL(ED)
PR	PAIR
PREP	PREPARE (SURFACE)
PROV	PROVIDE(D)
PSF	POUNDS PER SQUARE FOOT
PSI	POUNDS PER SQUARE INCH
PT	PAINT
PTD	PAINT(ED)
PVMT	PAVEMENT
QTY	QUANTITY
R	RADIUS, RISER
RB	RUBBER BASE
RD	ROOF DRAIN
REF	REFERENCE
REINF	REINFORCED
REQD / REQ'D	REQUIRED
RES	RESILIENT
RET	RETAINING
REV	REVISION(S) / REVISE(D)
RFG	ROOFING
RH	RIGHT HAND
RL	RAIN LEADER
RM	ROOM
RO	ROUGH OPENING
ROOF'G	ROOFING
S	SOUTH, SEAL
SC	SOLID CORE
SCHED(S)	SCHEDULE(S)
SEC	SECURE
SECT	SECTION
SF	SQUARE FEET
SHT	SHEET
SIM	SIMILAR
SPEC(S)	SPECIFICATION(S)
SQ	SQUARE
SS	STAINLESS STEEL
ST	STAINLESS
STD	STANDARD
STL	STEEL
STO	STORAGE
STRUC	STRUCTURAL
SUSP	SUSPENDED
SYM	SYMMETRICAL
SYS	SYSTEM
T	TREAD
T&G	TONGUE AND GROOVE
T.O.	TOP OF
TECH	TECHNOLOGY
TEL	TELEPHONE
TEMP	TEMPERED
THK	THICK(NESS)
THRESH	THRESHOLD
TOC	TOP OF CONCRETE
TOL	TOLERANCE
TOM	TOP OF MASONRY
TOS	TOP OF STEEL
TOW	TOP OF WALL
TRANS	TRANSPARENT
TYP	TYPICAL
UL	UNDERWRITER'S LABORATORY
UNAS	UNASSIGNED
UNFIN	UNFINISHED
UON	UNLESS OTHERWISE NOTED
VAR	VARIES
VERT	VERTICAL
VIF	VERIFY IN FIELD
VTR	VENT THROUHG ROOF
VU	VENTILATION UNIT
W	WIDE, WEST
W/	WITH
W/O	WITHOUT
WC	WATER CLOSET
WD	WOOD
WDW	WINDOW
WH	WALL HUNG
WIT	WITNESS
WP	WORK POINT
WT	WEIGHT
ℙ	PROPERTY LINE
℄	CENTER LINE
#	NUMBER
&	AND
@	AT
L	ANGLE
±	EXIST (OR APPROX) DIM - VIF

MASTER KEYNOTE LIST

Key Value	Keynote Text
03-03	PROVIDE CONCRETE BOLLARD.
03-04	POURED-IN-PLACE CONCRETE WALL; REFER TO STRUCTURAL
03-06	PROVIDE CONCRETE AHU SLAB. REFER TO MECHANICAL AND STRUCTURAL DWGS.
05-01	PROVIE BASE TRIM
05-03	PROVIDE METAL WALL PANEL.
05-06	PROVIDE 1 1/4" MIN. TO 2" MAX. O.D. GALV. STEEL POST AND RAILS (BOTH SIDES)
06-22	PROVIDE SOLID SURFACE COUNTER WITH INTEGRAL BACKSPLASH.
07-02	PROVIDE R19 FIBERGLASS BLANKET INSULATION
07-03	PROVIDE SEALANT.
07-11	PROVIDE METAL GUTTER.
07-12	PROVIDE DOWNSPOUT.
08-02	Provide standing seam roof translucent panel.
09-09	PAINT EDGE OF LOADING DOCK WITH BRIGHT COLOR EXTERIOR GRADE PAINT FOR SAFETY.
10-01	PROVIDE GRAB BARS.
10-02	PROVIDE SURFACE MOUNTED WALL HOOKS
10-03	PROVIDE WALL MOUNTED PAPER TOWEL DISPENSER.
10-04	PROVIDE MIRROR (1□-8□ W x 3□-4□ H).
10-08	PROVIDE WALL-MOUNTED SOAP DISPENSER.
11-01	PROVIDE ENERGY STAR 35" X 32" REFRIGERATOR.
11-02	PROVIDE 10 YD SELF-CONTAINED COMPACTOR (TOP LOAD).
11-03	PROVIDE UNDER-COUNTER ICE MACHINE
12-01	PROVIDE BUILT IN COUNTER WORKSURFFACE.
14-01	PROVIDE 6' X 8' MECHANICAL PIT LEVELER.
22-01	PROVIDE MOP SINK.
22-02	PROVIDE FLOOR DRAIN.
22-03	PROVIDE HOSE BIB. SEE P100.
22-05	PROVIDE DRINKING FOUNTAIN.
22-06	PROVIDE SERVICE SINK - SEE PLUMBING DRAWINGS.
22-08	PROVIDE SINK - SEE MECH DWGS.
22-09	PROVIDE EMERGENCY EYE WASH STATION.
22-10	PROVIDE TRENCH DRAIN.
22-11	PROVIDE TOILET.
23-03	PROVIDE LOUVER. SEE MECH DWGS.
23-04	PROVIDE AIR CURTAIN.
26-01	PROVIDE LIGHT FIXTURE. SEE ELECTRICAL & ARCHITECTURAL LIGHTING DRAWINGS.

QUINN EVANS ARCHITECTS

2121 WARD PLACE, NW
FOURTH FLOOR
WASHINGTON, DC 20007

v 202 298 6700
f 202 298 6666

WWW.QUINNEVANS.COM

FERRY FARM PHASE 1 IMPROVEMENTS M&O BUILDING

268 Kings Hwy, Fredericksburg, VA 22405

QEA # 31402900

ABBREVIATIONS AND KEYNOTES

BUILDING PERMIT SUBMISSION
06/30/15

REVISIONS

NO.	DESCRIPTION	DATE

A-001

6/29/2015 10:03:15 AM C:\Revit Local\M&O Buildings_mallen.rvt

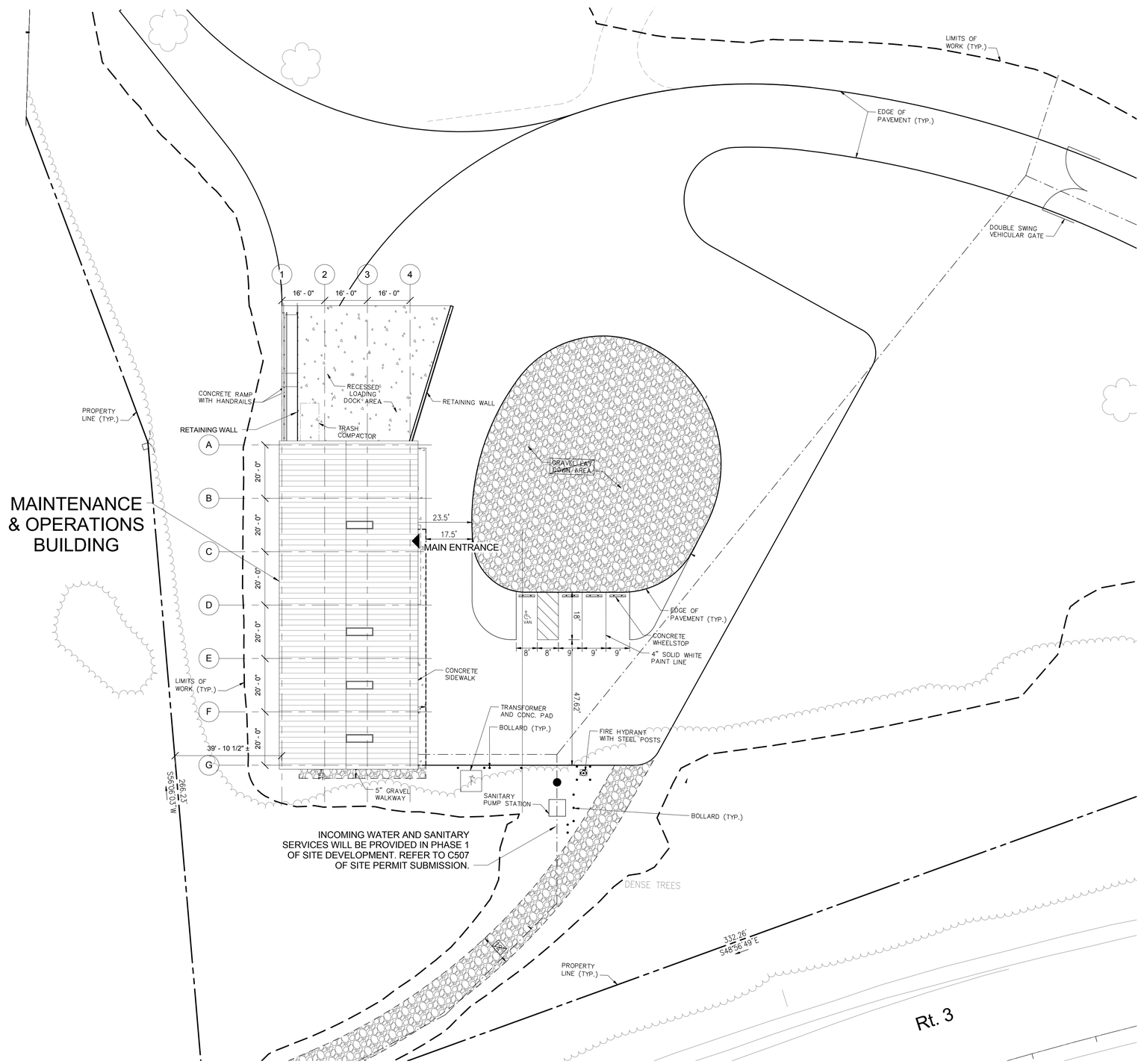

1 A-100 M&O Building Site Plan

1" = 20'-0" REFERRED FROM:

PROJECT NORTH

SEE G-002

30' 20' 10' 0" 20' 30'

1"= 20' - 0" SCALE OF FEET

QUINN EVANS ARCHITECTS

2121 WARD PLACE, NW
FOURTH FLOOR
WASHINGTON, DC 20007

v 202 298 6700
f 202 298 6666

WWW.QUINNEVANS.COM

FERRY FARM PHASE 1 IMPROVEMENTS M&O BUILDING

268 Kings Hwy, Fredericksburg, VA 22405

QEA # 31402900

SITE PLAN

BUILDING PERMIT SUBMISSION
06/30/15

REVISIONS

NO.	DESCRIPTION	DATE

A-100

6/29/2015 10:03:19 AM C:\Revit Local\M&O Buildings_mellerr.rvt

OCCUPANCY - BY ROOM					
Number	Name	Occupancy Type	Function of Space	Area	Occupants by Room
101	Work Area	B	Business Area (100 gross)	201.69 SF	2
102	Office	B	Business Area (100 gross)	77.81 SF	1
103	Map & File	B	Business Area (100 gross)	76.82 SF	1
104	Break Room	B	Business Area (100 gross)	303.33 SF	3
105	Corridor	B	Business Area (100 gross)	316.72 SF	3
106	ADA Restroom 1	B	Business Area (100 gross)	70.67 SF	1
107	ADA Restroom 2	B	Business Area (100 gross)	67.34 SF	1
108	Receiving / Staging	S-1	Warehouse (500 gross)	745.55 SF	2
109	Event Storage	S-1	Warehouse (500 gross)	170.07 SF	1
110	Janitors Closet	S-1	Accessory Storage (300 gross)	216.63 SF	1
111	MEP Parts Storage	S-1	Accessory Storage (300 gross)	157.79 SF	1
112	Mechanical Room	S-1	Mechanical (300 gross)	265.79 SF	1
113	Electrical Room	S-1	Mechanical (300 gross)	Not Placed	1
114	Pass Through Work Bay	F-1	Industrial (100 gross)	666.01 SF	7
115	Small Bay Equipment Storage	F-1	Industrial (100 gross)	704.07 SF	7
116	Paint / Carpentry Worshop	F-1	Industrial (100 gross)	679.18 SF	7
X01	Exterior Covered Loading			648.47 SF	

PARTITION TYPES			
Type Mark	Wall Description	Fire Rating	Comments
		0 HR	
2	3 1/2" Wood Stud at 16" OC and 5/8" Impact Resistant GWB and Green board, 4' Ceramic Tile Wainscot on one side. Rock wool insulation in wall cavities.	0 HR	
3	Full Height to Underside of Roof, 3 1/2" structural grade wood stud at 12" OC, and 5/8" Impact Resistant GWB both sides. Rock wool insulation in wall cavities.	0 HR	
4	3 1/2" Wood Stud at 16" OC and 5/8" Impact Resistant GWB both sides.	0 HR	

GENERAL INFORMATION

Building Construction Classification:
Type IIB

Use and Occupancy Classification:
Factory Industrial Group F-1, moderate hazard
Business Group B
Storage Group S-1, moderate hazard
(Mixed Use, Non-Seperated)

Design Building Area and Height:
1 Story Above Grade - 5,015 sf

Overall Occupant Load:
39

Fire Sprinkler: Not required.
Fire Alarm and Detection Systems: Not required.
Fire Protection: Portable Fire Extinguishers complying with Section 906

Smoke Detection: Smoke Detectors in drop ceilings.
Panic Hardware: Not required.

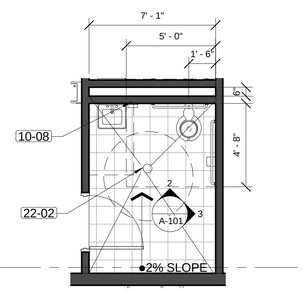

4 A-101 ENLARGED ADA RESTROOM -TYP.
1/4" = 1'-0" REFERRED FROM: A-101

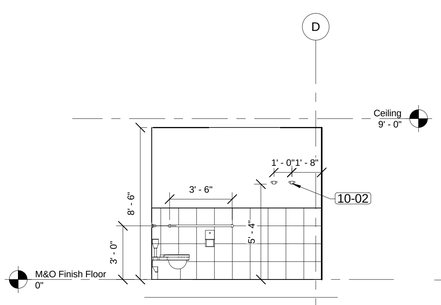

3 A-101 RESTROOM ELEVATION - E
1/4" = 1'-0" REFERRED FROM: A-101

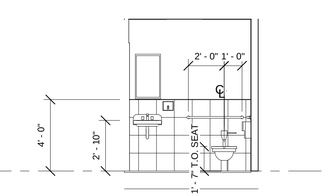

2 A-101 RESTROOM ELEVATION - N
1/4" = 1'-0" REFERRED FROM: A-101

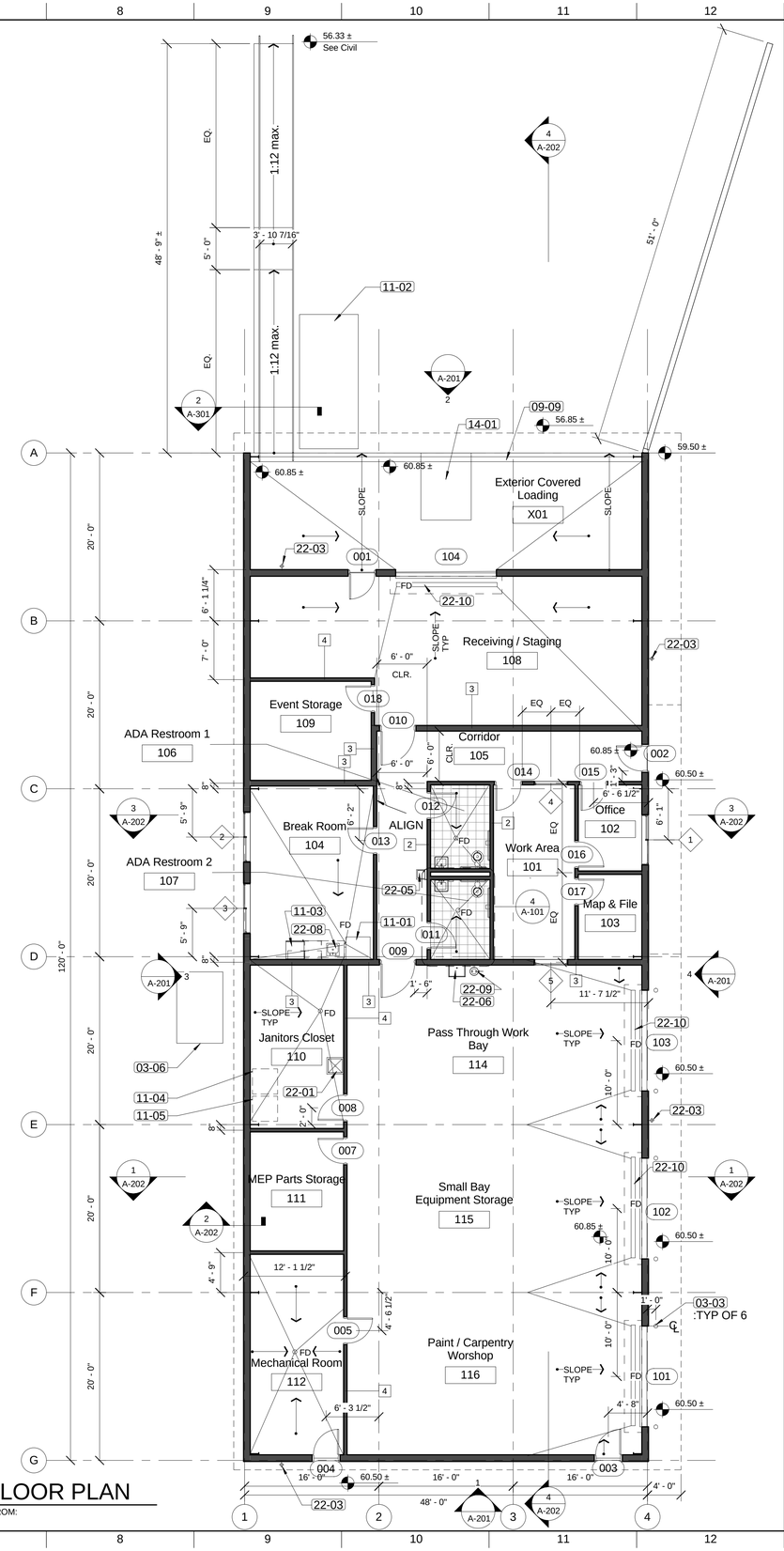

1 A-101 GROUND FLOOR PLAN
1/8" = 1'-0" REFERRED FROM:

SHEET KEYNOTES	
Key Value	Keynote Text
03-03	PROVIDE CONCRETE BOLLARD.
03-06	PROVIDE CONCRETE AHU SLAB. REFER TO MECHANICAL AND STRUCTURAL DWGS.
09-09	PAINT EDGE OF LOADING DOCK WITH BRIGHT COLOR EXTERIOR GRADE PAINT FOR SAFETY.
10-02	PROVIDE SURFACE MOUNTED WALL HOOKS
10-08	PROVIDE WALL-MOUNTED SOAP DISPENSER.
11-01	PROVIDE ENERGY STAR 35" X 32" REFRIGERATOR.
11-02	PROVIDE 10 YD SELF-CONTAINED COMPACTOR (TOP LOAD).
11-03	PROVIDE UNDER-COUNTER ICE MACHINE.
11-04	PROVIDE ROUGH-IN FOR FUTURE DRYER.
11-05	PROVIDE ROUGH-IN FOR FUTURE WASHER.
14-01	PROVIDE 6' X 8' MECHANICAL PIT LEVELER.
22-01	PROVIDE MOP SINK.
22-02	PROVIDE FLOOR DRAIN.
22-03	PROVIDE HOSE BIB. SEE P100.
22-05	PROVIDE DRINKING FOUNTAIN.
22-06	PROVIDE SERVICE SINK - SEE PLUMBING DRAWINGS.
22-08	PROVIDE SINK - SEE MECH DWGS.
22-09	PROVIDE EMERGENCY EYE WASH STATION.
22-10	PROVIDE TRENCH DRAIN.

NOTES

1. See A-401 for window, door, and finish schedules.

PROJECT NORTH
SEE G-002

8' 0' 8' 16'
1/8" = 1' - 0" SCALE OF FEET

QUINN EVANS ARCHITECTS
2121 WARD PLACE, NW
FOURTH FLOOR
WASHINGTON, DC 20007
v 202 298 6700
f 202 298 6666
WWW.QUINNEVANS.COM

FERRY FARM PHASE 1 IMPROVEMENTS M&O BUILDING

268 Kings Hwy, Fredericksburg, VA 22405

QEA # 31402900

PLANS & ADA DETAILS

BUILDING PERMIT SUBMISSION
06/30/15

REVISIONS

NO.	DESCRIPTION	DATE

A-101

6/29/2015 11:49:46 AM C:\Revit Local\M&O Buildings_mallen.rvt

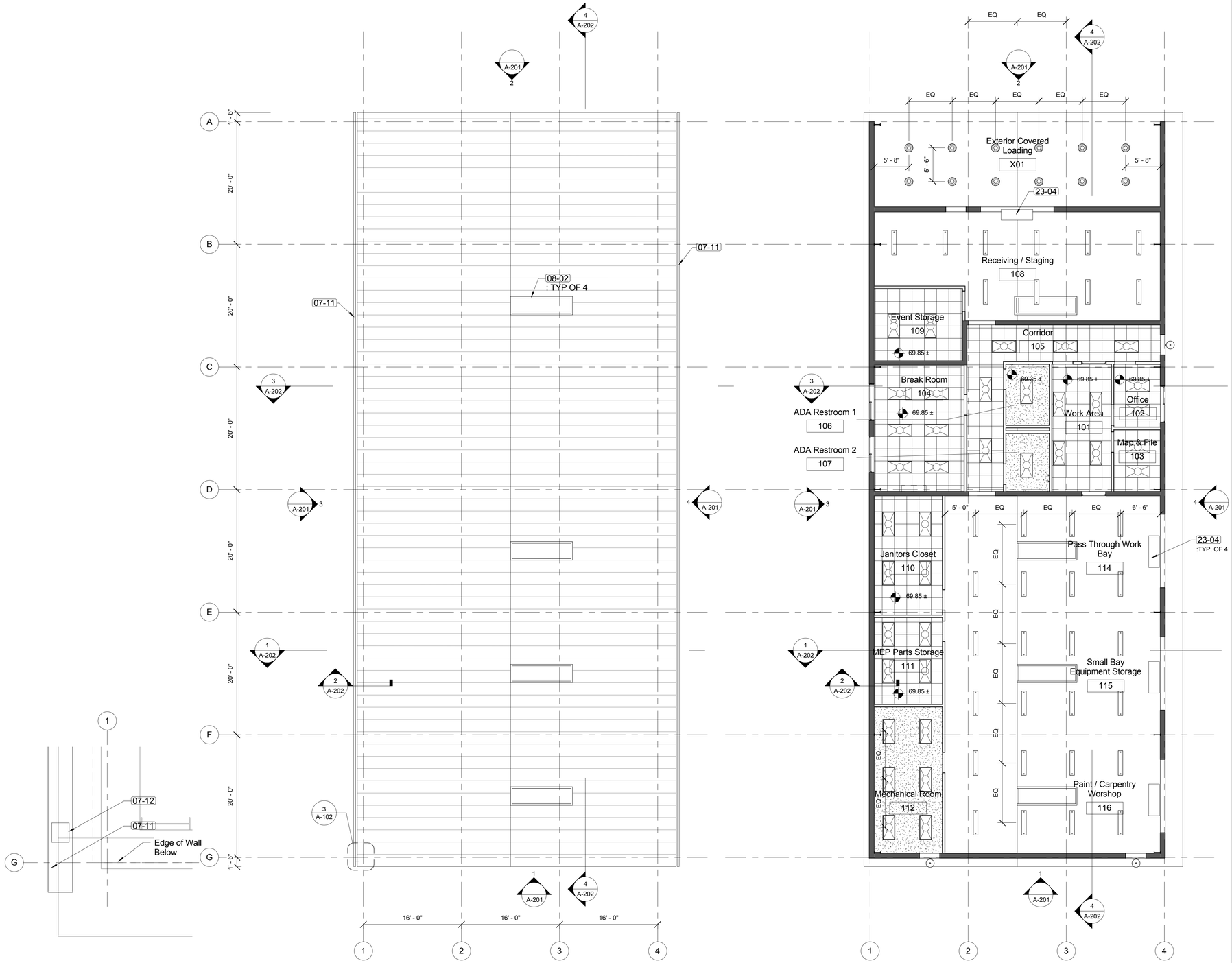

3 A-102 ROOF DETAIL

1" = 1'-0" REFERRED FROM: A-102

2 A-102 ROOF PLAN

1/8" = 1'-0" REFERRED FROM: A-201

1 A-102 GROUND RCP

1/8" = 1'-0" REFERRED FROM: A-101

SHEET KEYNOTES

Key Value	Keynote Text
07-11	PROVIDE METAL GUTTER.
07-12	PROVIDE DOWNSPOUT.
08-02	Provide standing seam roof translucent panel.
23-04	PROVIDE AIR CURTAIN.

NOTES

1. Provide flashing at all roof penetrations.

REFLECTED CEILING PLAN LEGEND

- 2' x 2' ACT Panel Ceiling
- GWB Ceiling
- Finished Ceiling Elevation
- 2' x 4' Parabolic Troffer Light
- 1' x Pendant Lighting Fixture; Refer to typical section for fixture heights.
- Exterior Pendant Light
- Exterior Wall Mounted Light
- Return Diffuser
- Supply Diffuser
- Linear Diffuser
- SD Smoke Detector

PROJECT NORTH

SEE G-002

8' 0' 8' 16'

1/8" = 1' - 0" SCALE OF FEET

QUINN EVANS ARCHITECTS

2121 WARD PLACE, NW
FOURTH FLOOR
WASHINGTON, DC 20007

v 202 298 6700
f 202 298 6666

WWW.QUINNEVANS.COM

FERRY FARM PHASE 1 IMPROVEMENTS M&O BUILDING

268 Kings Hwy, Fredericksburg, VA 22405

QEA # 31402900

RCP & ROOF PLAN

BUILDING PERMIT SUBMISSION
06/30/15

REVISIONS

NO.	DESCRIPTION	DATE

A-102

6/29/2015 10:03:23 AM C:\Revit Local\M&O Buildings_matten.rvt

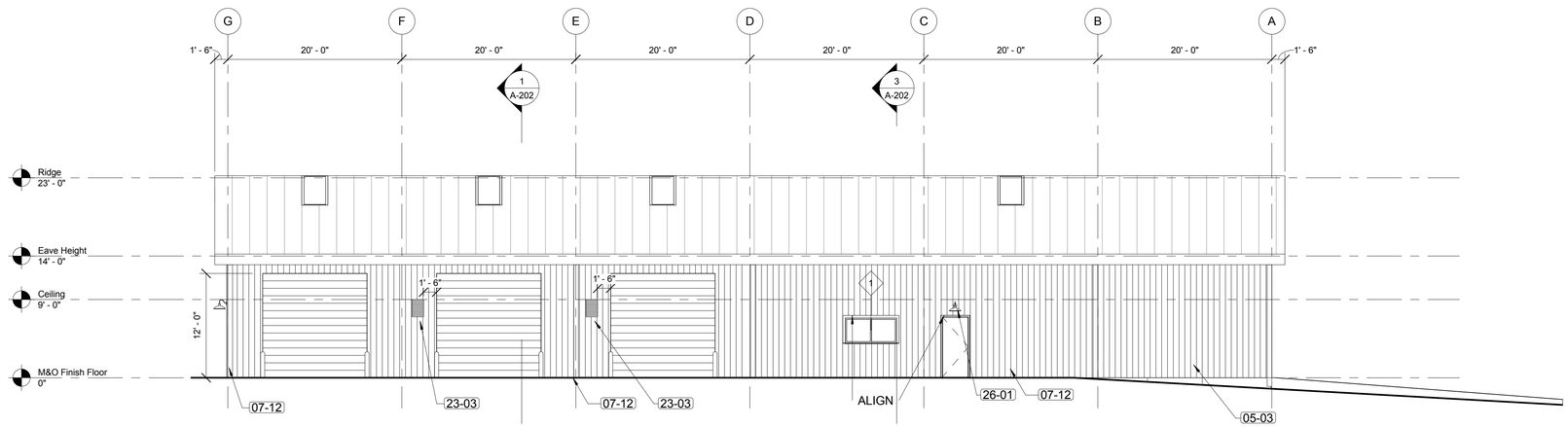

4 A-201 NORTH ELEVATION
1/8" = 1'-0" REFERRED FROM: A-101

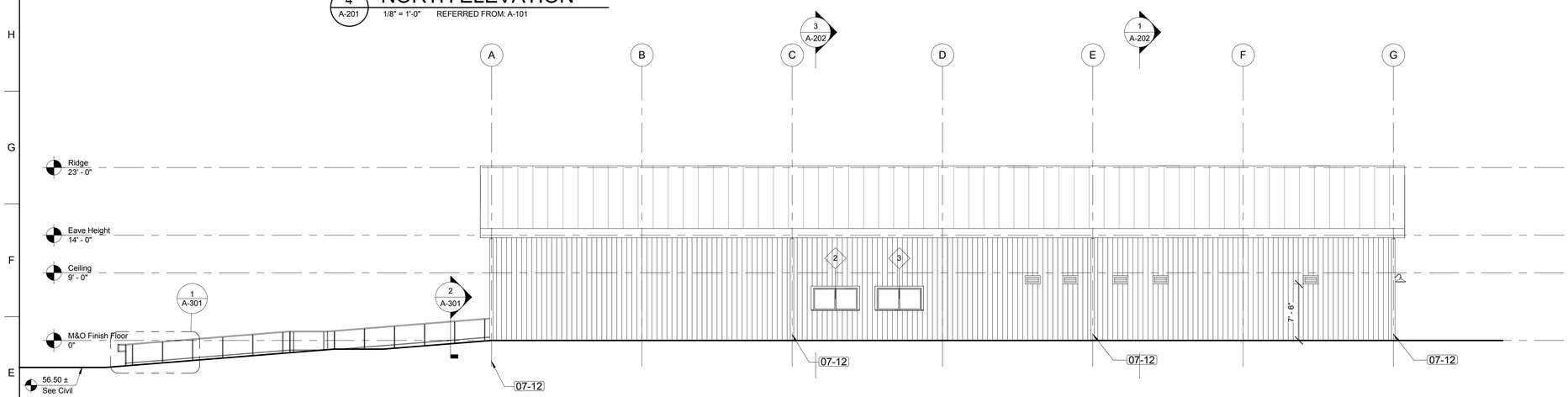

3 A-201 SOUTH ELEVATION
1/8" = 1'-0" REFERRED FROM: A-101

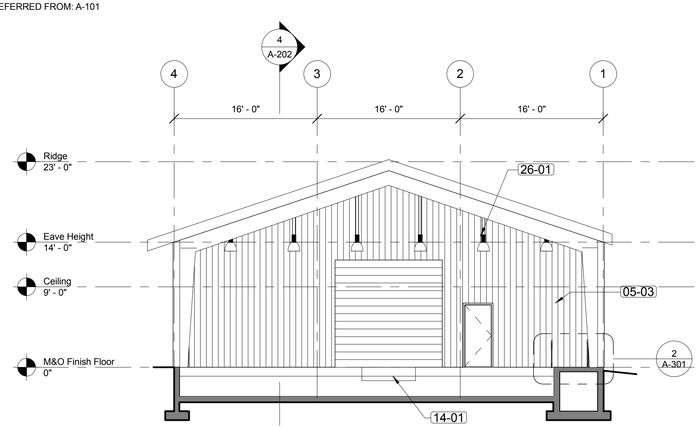

2 A-201 WEST ELEVATION
1/8" = 1'-0" REFERRED FROM: A-101

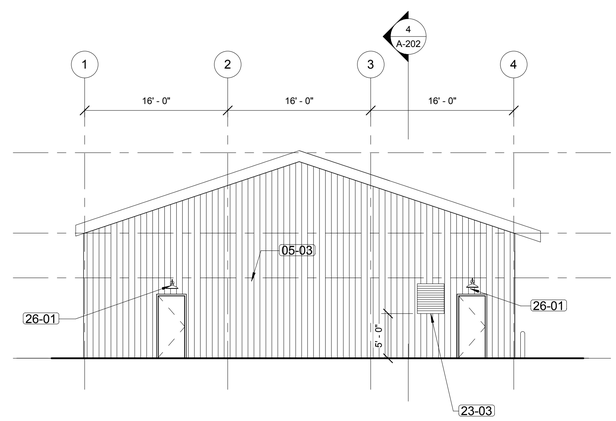

1 A-201 EAST ELEVATION
1/8" = 1'-0" REFERRED FROM: A-101

8' 0' 8' 16'
1/8" = 1' - 0" SCALE OF FEET

SHEET KEYNOTES	
Key Value	Keynote Text
05-03	PROVIDE METAL WALL PANEL.
07-12	PROVIDE DOWNSPOUT.
14-01	PROVIDE 6' X 8' MECHANICAL PIT LEVELER.
23-03	PROVIDE LOUVER. SEE MECH DWGS.
26-01	PROVIDE LIGHT FIXTURE. SEE ELECTRICAL & ARCHITECTURAL LIGHTING DRAWINGS.

QUINN EVANS ARCHITECTS

2121 WARD PLACE, NW
FOURTH FLOOR
WASHINGTON, DC 20007

v 202 298 6700
f 202 298 6666

WWW.QUINNEVANS.COM

FERRY FARM PHASE 1 IMPROVEMENTS M&O BUILDING

268 Kings Hwy, Fredericksburg, VA 22405

QEA # 31402900

ELEVATIONS

BUILDING PERMIT SUBMISSION
06/30/15

REVISIONS

NO.	DESCRIPTION	DATE

A-201

6/29/2015 10:03:24 AM C:\Revit Local\M&O Building_mellen.rvt

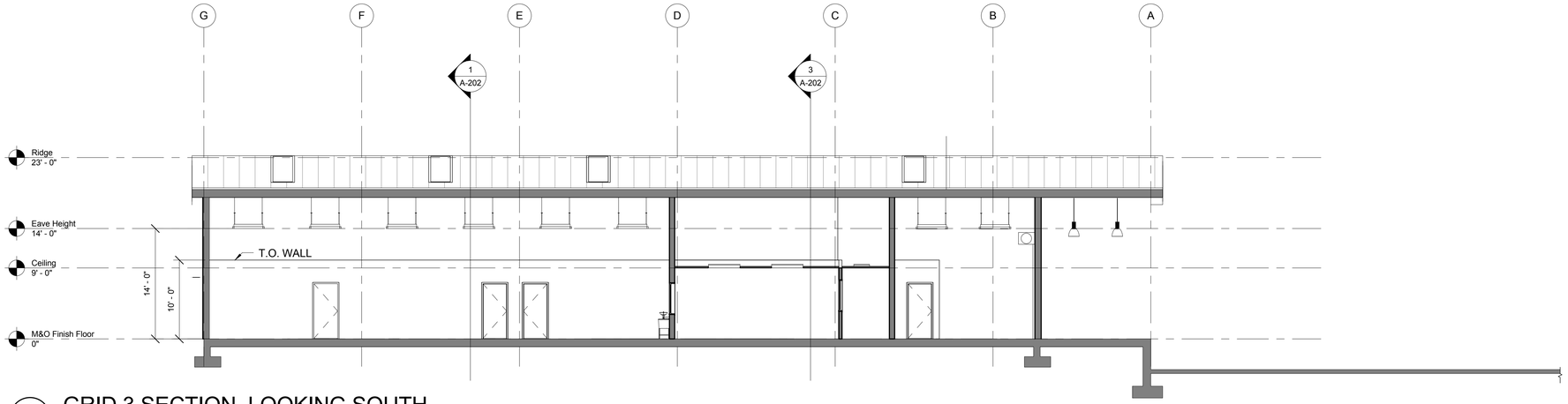

4 A-202 GRID 3 SECTION, LOOKING SOUTH

1/8" = 1'-0" REFERRED FROM: A-101

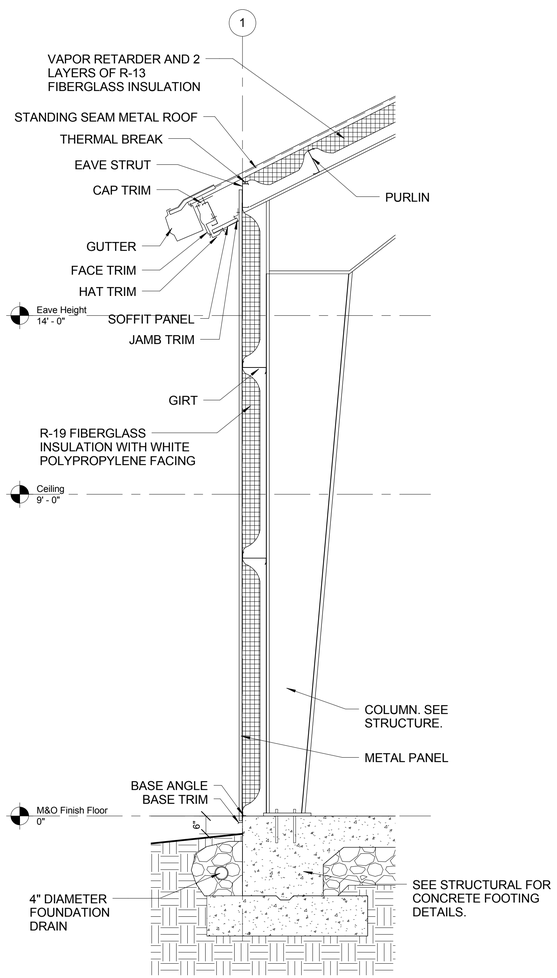

2 A-202 TYPICAL SIDEWALL

1/2" = 1'-0"

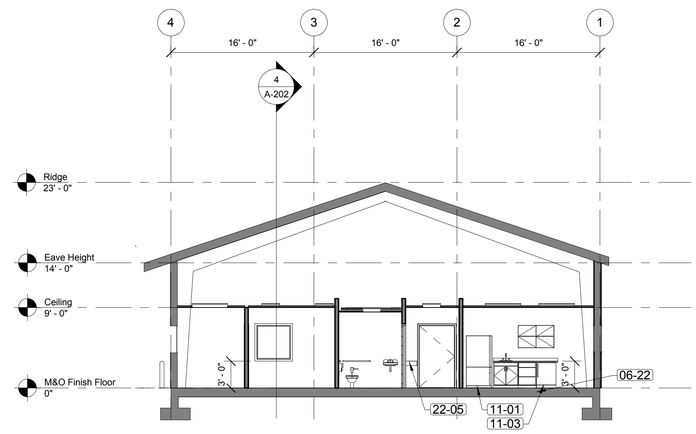

3 A-202 Grid C Section - Looking West

1/8" = 1'-0" REFERRED FROM: A-101

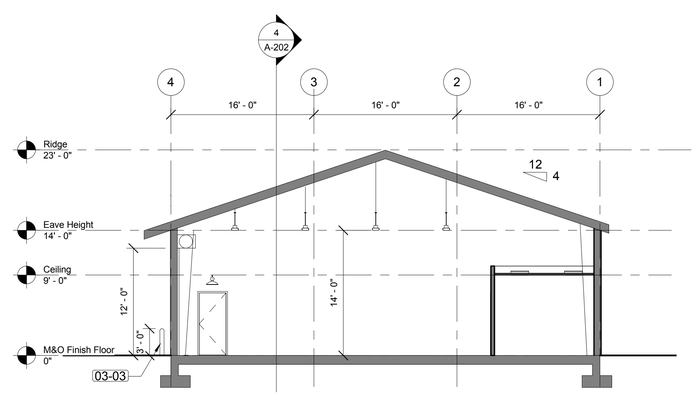

1 A-202 Grid E Section, Looking West

1/8" = 1'-0" REFERRED FROM: A-101

2' 1' 0 2' 4'

1/2" = 1' - 0" SCALE OF FEET

8' 0' 8' 16'

1/8" = 1' - 0" SCALE OF FEET

SHEET KEYNOTES	
Key Value	Keynote Text
03-03	PROVIDE CONCRETE BOLLARD.
06-22	PROVIDE SOLID SURFACE COUNTER WITH INTEGRAL BACKSPLASH.
11-01	PROVIDE ENERGY STAR 35" X 32" REFRIGERATOR.
11-03	PROVIDE UNDER-COUNTER ICE MACHINE
22-05	PROVIDE DRINKING FOUNTAIN.

QUINN EVANS ARCHITECTS

2121 WARD PLACE, NW
FOURTH FLOOR
WASHINGTON, DC 20007

v 202 298 6700
f 202 298 6666

WWW.QUINNEVANS.COM

FERRY FARM PHASE 1 IMPROVEMENTS M&O BUILDING

268 Kings Hwy, Fredericksburg, VA 22405

QEA # 31402900

BUILDING & WALL SECTIONS

BUILDING PERMIT SUBMISSION
06/30/15

REVISIONS

NO.	DESCRIPTION	DATE

A-202

6/29/2015 10:03:23 AM C:\Revit Local\M&O Buildings_mallen.rvt

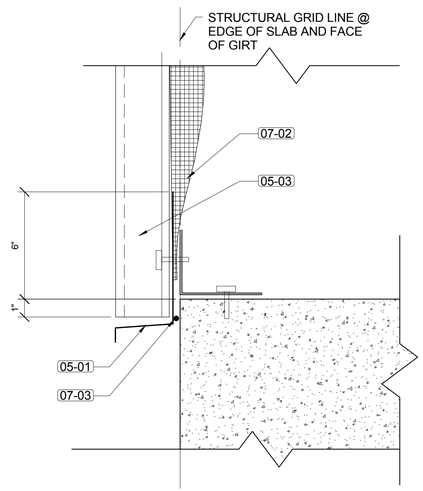

3 A-301 BASE TRIM DETAIL
3" = 1'-0"

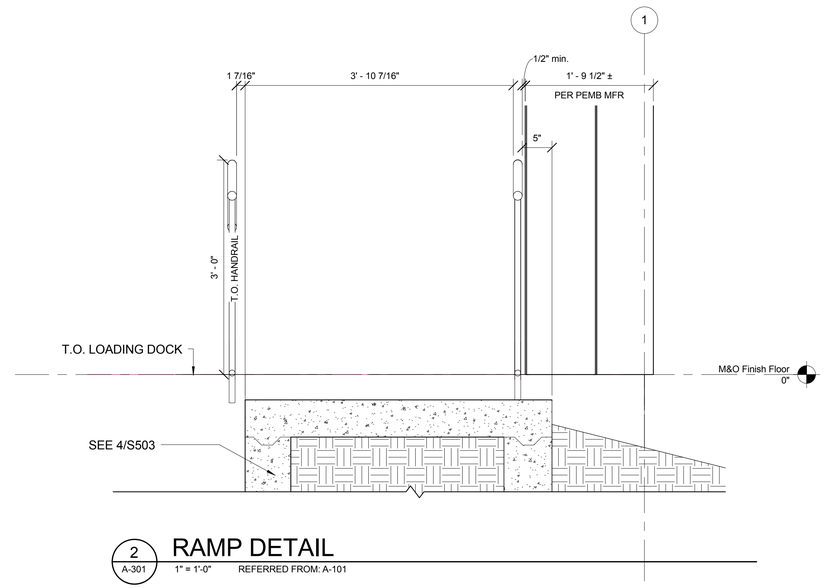

2 A-301 RAMP DETAIL
1" = 1'-0" REFERRED FROM: A-101

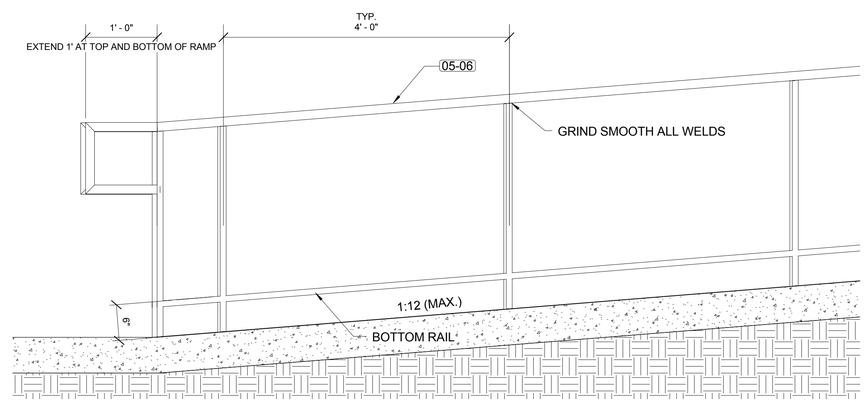

1 A-301 Exterior Railing
1" = 1'-0" REFERRED FROM: A-201

SHEET KEYNOTES	
Key Value	Keynote Text
05-01	PROVIE BASE TRIM
05-03	PROVIDE METAL WALL PANEL.
05-06	PROVIDE 1 1/4" MIN. TO 2" MAX. O.D. GALV. STEEL POST AND RAILS (BOTH SIDES)
07-02	PROVIDE R19 FIBERGLASS BLANKET INSULATION
07-03	PROVIDE SEALANT.

6" 3" 0" 6"
3" = 1' - 0" SCALE OF FEET

1' 6" 0 1' 2'
1" = 1' - 0" SCALE OF FEET

QUINN EVANS ARCHITECTS

2121 WARD PLACE, NW
FOURTH FLOOR
WASHINGTON, DC 20007

v 202 298 6700
f 202 298 6666

WWW.QUINNEVANS.COM

FERRY FARM PHASE 1 IMPROVEMENTS M&O BUILDING

268 Kings Hwy, Fredericksburg, VA 22405

QEA # 31402900

DETAILS

BUILDING PERMIT SUBMISSION
06/30/15

REVISIONS

NO.	DESCRIPTION	DATE

A-301

6/29/2015 10:03:23 AM C:\Revit Local\M&O Buildings_mwilen.rvt

Window Schedule					
Mark	Width	Height	Sill Height	Window Treatment	Comments
1	6' - 0"	3' - 0"	3' - 11 1/4"	Aluminum Blinds	
2	6' - 0"	3' - 0"	4' - 0"	Aluminum Blinds	
3	6' - 0"	3' - 0"	4' - 0"	Aluminum Blinds	
4	4' - 0"	4' - 0"	3' - 6"		
5	4' - 0"	4' - 0"	3' - 1 1/4"		

Door Schedule										
Mark	Fire Rating	Door Width	Door Height	Door Material	Door Panel Thickness	Panel Finish	Frame Material	Frame Finish	Hardware	Comments
001	Not Rated	3' - 0"	7' - 0"	Steel	1 3/4"	Paint	HM	Paint	Type 1	
002	Not Rated	3' - 0"	7' - 0"	Steel	1 3/4"	Paint	HM	Paint	Type 1	
003	Not Rated	3' - 0"	7' - 0"	Steel	1 3/4"	Paint	HM	Paint	Type 1	
004	Not Rated	3' - 0"	7' - 0"	Steel	1 3/4"	Paint	HM	Paint	Type 1	
005	Not Rated	3' - 0"	7' - 0"	Steel	1 3/4"	Paint	HM	Paint	Type 2	
007	Not Rated	3' - 0"	7' - 0"	Steel	1 3/4"	Paint	HM	Paint	Type 2	
008	Not Rated	3' - 0"	7' - 0"	Steel	1 3/4"	Paint	HM HM HM	Paint	Type 2	
009	Not Rated	4' - 0"	7' - 0"	Steel	1 3/4"	Paint	HM	Paint	Type 2	
010	Not Rated	4' - 0"	7' - 0"	Steel	1 3/4"	Paint	HM	Paint	Type 2	
011	Not Rated	3' - 0"	7' - 0"	Steel	1 3/4"	Paint	HM	Paint	Type 3	
012	Not Rated	3' - 0"	7' - 0"	Steel	1 3/4"	Paint	HM	Paint	Type 3	
013	Not Rated	3' - 0"	7' - 0"	Steel	1 3/4"	Paint	HM	Paint	Type 2	
014	Not Rated	3' - 0"	7' - 0"	Steel	1 3/4"	Paint	HM	Paint	Type 2	
015	Not Rated	3' - 0"	7' - 0"	Steel	1 3/4"	Paint	HM	Paint	Type 2	
016	Not Rated	3' - 0"	7' - 0"	Steel	1 3/4"	Paint	HM	Paint	Type 2	
017	Not Rated	3' - 0"	7' - 0"	Steel	1 3/4"	Paint	HM	Paint	Type 2	
018	Not Rated	3' - 0"	7' - 0"	Steel	1 3/4"	Paint	HM	Paint	Type 2	
101		12' - 0"	14' - 0"	Steel			HM	Paint	Aumotatic Motor	
102		12' - 0"	14' - 0"	Steel			HM	Paint	Aumotatic Motor	
103		12' - 0"	14' - 0"	Steel			HM	Paint	Aumotatic Motor	
104		12' - 0"	12' - 0"	Steel			HM	Paint	Aumotatic Motor	

DOOR SCHEDULE NOTES:
Hardware Type 1: Hinges, ADA lockset, cylinder, closer, kickplate, stop, threshold, and gasketing

Finish Schedule						
Number	Name	Floor Finish	Base Finish	Wall Finish	Ceiling Finish	Comments
101	Work Area	C	RB	PT-1	ACT-1	
102	Office	C	RB	PT-1	ACT-1	
103	Map & File	C	RB	PT-1	ACT-1	
104	Break Room	C	RB	PT-1	ACT-1	
105	Corridor	C	RB	PT-1	ACT-1	
106	ADA Restroom 1	CT-1	CT-2	PT-1, CT-3	ACT-1	See note 1, 2
107	ADA Restroom 2	CT-1	CT-2	PT-1, CT-3	ACT-1	See note 1,2
108	Receiving / Staging	C	RB	PT-1		
109	Event Storage	C	RB	PT-1	ACT-1	
110	Janitors Closet	C	RB	PT-1	ACT-1	
111	MEP Parts Storage	C	RB	PT-1	ACT-1	
112	Mechanical Room	C	RB	PT-1	ACT-1	
113	Electrical Room	C	RB	PT-1	ACT-1	
114	Pass Through Work Bay	C	RB	PT-1		
115	Small Bay Equipment Storage	C	RB	PT-1		
116	Paint / Carpentry Worshop	C	RB	PT-1		
X01	Exterior Covered Loading	C				

FINISH SCHEDULE NOTES:
1. Provide a layer of fiberglass blanket insulation above the ADA restroom drop ceiling to improve sound attenuation.
2. Provide Ceramic Tile up to 4' above FF.
3. Interior perimeter walls and underside of roof will have exposed fiberglass insulation with a white fiberglass mesh facing.
4. If color or finish is not specified contact architect for clarification.
5. Submit three samples for approval per material specified, label each to match the finish legend designation. Include poduct data, seaming diagrams, and shop drawings prior to procurmeent or fabrication.
6. Provide minimum one box overage on all tile products, all sizes, styles and colors.
7. Heat weld all sheet resilient flooring seams and seal.
8. Provide 4" continuous rubber base with field formed corners on all but the perimeter walls.
9. Provide sanitary cove tile base at through ADA restroom walls.
10. See window schedule for windows to receive shades.
11. Provide 1 unisex accessible sign at each ADA restroom. Submit shop drawing layout prior to fabrication.

FINISH LEGEND

ACT-1 2' x 2' ACOUSTIC TILE CEILING
C CONCRETE SEALER
CT-1 CERAMIC TILE FLOORING
CT-2 CERAMIC TILE BASE
RES RESLIENT SHEET FLOORING
RB RESILIENT BASE
PT-1 INTERIOR PAINT

QUINN EVANS ARCHITECTS

2121 WARD PLACE, NW
FOURTH FLOOR
WASHINGTON, DC 20007

v 202 298 6700
f 202 298 6666

WWW.QUINNEVANS.COM

FERRY FARM PHASE 1 IMPROVEMENTS M&O BUILDING

268 Kings Hwy, Fredericksburg, VA 22405

QEA # 31402900

SCHEDULES

BUILDING PERMIT SUBMISSION
06/30/15

REVISIONS

NO.	DESCRIPTION	DATE

A-401

6/29/2015 10:03:28 AM C:\Revit Local\M&O Buildings_mattler.rvt

STRUCTURAL NOTES

CONSTRUCTION SHALL COMPLY WITH, AND DESIGN HAS BEEN PERFORMED IN ACCORDANCE WITH, THE PROJECT SPECIFICATIONS AND THE NOTES BELOW. IF THERE ARE ANY PERCEIVED CONFLICTS BETWEEN THE SPECIFICATIONS AND THE NOTES OR THE DRAWINGS, THE CONTRACTOR SHALL SUBMIT A WRITTEN REQUEST FOR CLARIFICATION TO THE PROJECT DIRECTOR. SEE THE CONTRACT SPECIFICATIONS FOR QUALITY ASSURANCE REQUIREMENTS.

A. CODES, STANDARDS, AND REFERENCES

1. BUILDING CODE: INTERNATIONAL BUILDING CODE (IBC)-2009 AND ASCE 7-05.
2. CONCRETE CODES: SPECIFICATIONS FOR STRUCTURAL CONCRETE (ACI 301-10) AND BUILDING CODE REQUIREMENTS FOR STRUCTURAL CONCRETE (ACI 318-08). REINFORCING DETAILS SHALL CONFORM TO THE ACI DETAILING MANUAL AND CRSI STANDARDS.
3. STEEL CODES: SPECIFICATION FOR STRUCTURAL STEEL BUILDINGS (ANSI/AISC 360-05). STRUCTURAL WELDING CODE - STEEL (AWS D1.1-2004).
4. MASONRY CODE: BUILDING CODE REQUIREMENTS AND SPECIFICATIONS FOR MASONRY STRUCTURES ACI 530/530.1-08.

B. OCCUPANCY

1. OCCUPANCY CATEGORY: II.

C. FLOOR LIVE LOADS

1. FLOOR(S): 150 PSF .
2. MECHANICAL EQUIPMENT ROOMS: 150 PSF (PLUS WEIGHT OF EQUIPMENT).
3. LIGHT STORAGE: 125 PSF.
4. HEAVY STORAGE: 250 PSF.
5. LOADING DOCK: 150 PSF.
6. CONSTRUCTION: 50 PSF.

D. ROOF LIVE LOAD

1. FLAT ROOF: 20 PSF.
2. SLOPED ROOF: 20 PSF.

E. SNOW LOADS

1. GROUND SNOW LOAD (P_g): 25 PSF.
2. FLAT ROOF SNOW LOAD (Pf): 17.5 PSF.
3. SLOPED ROOF SNOW LOAD (P_s): 15.9 PSF
4. SNOW IMPORTANCE FACTOR (I_S): 1.0.
5. SNOW EXPOSURE FACTOR (C_e): 1.0
6. SNOW LOAD THERMAL FACTOR (C_T): 1.0.

F. WIND LOADS

1. BASIC WIND SPEED (3 SECOND GUST) (V): 90 MPH.
2. WIND LOAD IMPORTANCE FACTOR (I_W): 1.0.
3. WIND EXPOSURE CATEGORY: B.
4. WIND INTERNAL PRESSURE COEFFICIENTS (GCpi: +/- 0.18)
5. COMPONENTS AND CLADDING WIND PRESSURES SHALL BE CALCULATED IN ACCORDANCE WITH ASCE 7-05. COMPONENTS AND CLADDING DESIGN PRESSURES MAY BE REDUCED IN ACCORDANCE WITH ASCE 7-05.

G. SEISMIC CRITERIA

1. SITE CLASS IS: D.
2. SEISMIC IMPORTANCE FACTOR (I_E): 1.0.
3. MAPPED SPECTRAL RESPONSE ACCELERATION AT SHORT PERIODS (S_S): 0.16.
4. MAPPED SPECTRAL RESPONSE ACCELERATION AT 1-SECOND PERIOD (S_1): 0.06.
5. DESIGN SPECTRAL ACCELERATION PARAMETER AT SHORT PERIODS (S_{DS}): 0.17.
6. DESIGN SPECTRAL ACCELERATION PARAMETER AT 1-SECOND PERIOD (S_{D1}): 0.096.
7. SEISMIC DESIGN CATEGORY: B.

TO BE DETERMINED AND PROVIDED BY THE PRE-ENGINEERING BUILDING DESIGNER:

8. BASIC SEISMIC FORCE RESISTING SYSTEM
9. SEISMIC RESPONSE COEFFICIENT (C_s)
10. RESPONSE MODIFICATION COEFFICIENT (R)
11. ANALYSIS PROCEDURE
12. DESIGN BASE SHEAR

H. GEOTECHNICAL CRITERIA

1. THE GEOTECHNICAL CRITERIA LISTED BELOW IS IN ACCORDANCE WITH THE GEOTECHNICAL REPORT PREPARED BY ECS, LIMITED AND DATED AUGUST 9, 2013 AND REVISED SEPTEMBER 18, 2013. T
2. DESIGN SOIL BEARING PRESSURE: 2,000 PSF.
3. STATIC AT-REST LATERAL EARTH PRESSURE FOR BUILDING WALLS BELOW GRADE: 60 PSF/FT.

J. MATERIALS AND PHYSICAL PROPERTIES

1. "(___)" INDICATES ASTM STANDARD FOR WHICH MATERIAL SHALL CONFORM.
2. CONCRETE PROPERTIES SHALL CONFORM TO THE CRITERIA SPECIFIED IN TABLE 1 BELOW.
3. CONCRETE REINFORCEMENT (A615, GRADE 60)..... Fy=60,000 psi
4. WELDED PLAIN WIRE REINFORCEMENT (A1064) UNDER W1.2..... Fy=56,000 psi
   W1.2 AND OVER..... Fy=65,000 psi

TABLE 1: CONCRETE PROPERTIES

STRUCTURE TYPE	f'_c(MINIMUM ULTIMATE COMPRESSIVE STRENGTH AT 28 DAYS (PSI)	MAXIMUM WATER/ CEMENTITIOUS MATERIALS RATIO	ENTRAINED AIR CONTENT (%)	UNIT WEIGHT
FOUNDATIONS, INT. SLABS	4000	0.59	UP TO 2%	NW
EXT. WALLS OR PIERS	4000	0.58	5%	NW
EXT. UNREINF. WALKS AND SLABS	4000	0.53	6%	NW
EXTERIOR REINF. SLABS, STAIRS, AND RAMP	4000	0.47	6%	NW

NOTE: NW DESIGNATES NORMAL WEIGHT CONCRETE, LW DESIGNATES LIGHTWEIGHT CONCRETE WITH A DRY UNIT WEIGHT OF 115-118 POUNDS PER CUBIC FOOT.

K. FOOTINGS

1. PRIOR TO EXCAVATING FOR FOOTINGS, REVIEW GEOTECHNICAL REPORT FOR EARTHWORK AND BACKFILL REQUIREMENTS.
2. FOOTING ELEVATIONS SHOWN ON THE PLANS ARE TOP OF FOOTING ELEVATIONS.
3. LOCATION OF FOOTING STEPS SHOWN ON THE FOUNDATION PLAN ARE APPROXIMATE AND INTENDED FOR USE BY THE CONTRACTOR IN BIDDING. EXACT LOCATION SHALL BE DETERMINED IN THE FIELD BY THE GENERAL CONTRACTOR USING THE SITE PLAN AND THE GEOTECHNICAL REPORT.
4. THE SOIL SUBGRADE OF EACH FOOTING SHALL BE THOROUGHLY CHECKED AND APPROVED BY THE GEOTECHNICAL ENGINEER TO VERIFY THAT THE SOIL TYPE AND BEARING CAPACITY MEET THE REQUIREMENT OF THE GEOTECHNICAL REPORT.
5. BOTTOMS OF ALL FOOTINGS SHALL EXTEND 1'-0" MINIMUM INTO UNDISTURBED SOIL AND, WHERE SUBJECT TO FROST ACTION, AT LEAST 2'-6" BELOW FINISHED GRADE.
6. WHERE THE SUBGRADE SOILS ARE FOUND TO BE UNSUITABLE, THE SOILS SHALL BE REMOVED AND REPLACED WITH LEAN CONCRETE. IF HIGH PLASTICITY SOILS ARE ENCOUNTERED AT THE FOUNDATION BEARING ELEVATION OR WITHIN 2 FEET BELOW THE FOOTING SUBGRADE, THE FOOTINGS SHALL BE LOWERED TO A DEPTH OF 4 FEET BELOW THE FINAL EXTERIOR GRADE OR TO NON-EXPANSIVE SOILS, WHICHEVER IS LESS.
7. IF THE DESIGN SOIL BEARING PRESSURE NOTED IN THE STRUCTURAL NOTES SECTION "GEOTECHNICAL CRITERIA" CANNOT BE ACHIEVED AT THE FOOTING ELEVATIONS INDICATED ON THE FOUNDATION PLAN, THE FOOTINGS SHALL BE LOWERED TO ACHIEVE THE DESIGN BEARING PRESSURE.
8. FOUNDATION CONCRETE SHALL BE PLACED THE SAME DAY THAT EXCAVATIONS ARE MADE. SEE SPECIFIC REQUIREMENTS IN THE GEOTECHNICAL REPORT IF BEARING SOILS ARE SOFTENED BY SURFACE WATER, IF THE EXCAVATION REMAINS OVERNIGHT, OR IF THE BEARING SOILS ARE EXPOSED TO WATER.
9. UNLESS NOTED OTHERWISE, WHERE UTILITIES ENTER THE BUILDING 4 FEET OR LESS BELOW THE BOTTOM OF FOOTING ELEVATION, THE FOOTING SHALL BE STEPPED DOWN TO ALLOW THE UTILITIES TO PASS THROUGH THE FOUNDATION WALL AND THE WALL PENETRATION SHALL BE SLEEVED AND PATCHED, SEE DETAIL 8/S-502. WHERE UTILITIES ENTER THE BUILDING MORE THAN 4 FEET BELOW THE BOTTOM OF FOOTING ELEVATION, THE UTILITIES SHALL PASS UNDER THE FOOTING, PER DETAIL 7/S-502. COORDINATE WITH MEP DRAWINGS.

L. BACKFILL PLACEMENT AND COMPACTION

1. BACKFILLING AGAINST WALLS WILL NOT BE PERMITTED UNTIL STRUCTURAL BRACING ELEMENTS AND/OR FLOOR CONSTRUCTION ARE IN PLACE. BRACING ARRANGEMENTS SHALL BE APPROVED BY THE PROJECT MANAGER PRIOR TO BACKFILLING.
2. THE CONTRACTOR SHALL TAKE ALL NECESSARY PRECAUTIONS TO BRACE FOUNDATION WALLS WHEN BACKFILLING AND WHEN THERE IS A POSSIBILITY OF DAMAGE BY EXCESS WATER. BACKFILLING AGAINST SUCH WALLS SHALL BE DONE IN A MANNER THAT WILL NOT DAMAGE WALLS. ALL PRECAUTIONS SHOULD BE TAKEN FOR ADEQUATE DRAINAGE PRIOR TO AND AFTER SUCH BACKFILLING.
3. ALL FILL MATERIAL SHALL BE PLACED IN COMPLIANCE WITH THE GEOTECHNICAL REPORT.

M. CAST-IN-PLACE CONCRETE CONSTRUCTION

1. CONCRETE WORK SHALL CONFORM TO ALL REQUIREMENTS OF ACI 318, ACI 301, AND THE ACI DETAILING MANUAL, EXCEPT AS MODIFIED BY THE CONTRACT SPECIFICATIONS.
2. SEE STRUCTURAL NOTES SECTION "MATERIALS AND PHYSICAL PROPERTIES" FOR CONCRETE STRENGTHS AND PROPERTIES.
3. PROVIDE VERTICAL CONTROL JOINTS IN REINFORCED CONCRETE WALLS LOCATED NOT MORE THAN 25 FEET ON CENTER. STOP ALL HORIZONTAL BARS IN EXPOSED FACE AT JOINTS (SEE 9/S-502 FOR TYPICAL DETAIL).
4. PROVIDE CONTINUOUS 2"x4" SHEAR KEY AT INTERFACE WHERE CONCRETE WALLS ARE SUPPORTED ON FOOTINGS AND WHERE CONCRETE SLABS ARE SUPPORTED ON CONCRETE WALLS.
5. ADD HIGH-RANGE WATER REDUCING ADMIXTURE (SUPER PLASTICIZER) TO CONCRETE MIX FOR PUMPED CONCRETE AND WHERE REQUIRED FOR WORKABILITY. LIMIT SLUMP IN CONCRETE TO 8" AFTER ADDITION OF HIGH-RANGE WATER REDUCER TO CONCRETE VERIFIED TO HAVE A 2"-4" SLUMP.
6. CONCRETE TEST CYLINDERS SHALL BE TAKEN IN ACCORDANCE WITH THE REQUIREMENTS OF ACI 318, CHAPTER 5 AND THE CONTRACT SPECIFICATIONS.
7. SEE CONTRACT SPECIFICATIONS, SECTION 033000 "CAST-IN-PLACE CONCRETE" FOR ADMIXTURE REQUIREMENTS. ADMIXTURE DOSAGE, ADDITION TIMES, COMPATIBILITY WITH OTHER ADMIXTURES, AND COMPATIBILITY WITH OTHER MIX CONSTITUENTS SHALL BE THE RESPONSIBILITY OF THE MANUFACTURER.

N. CONCRETE REINFORCEMENT

1. SEE STRUCTURAL NOTES SECTION "MATERIALS AND PHYSICAL PROPERTIES" FOR CONCRETE REINFORCEMENT STRENGTH.
2. DETAILS OF STEEL REINFORCEMENT SHALL CONFORM TO ACI 318 AND CRSI STANDARDS.
3. FOR ADDITIONAL CONCRETE REINFORCING INFORMATION REGARDING SLABS-ON-GRADE, REFER TO THE CORRESPONDING STRUCTURAL NOTES SECTIONS AND THE DRAWINGS.
4. CONCRETE PROTECTION FOR STEEL REINFORCEMENT OF CAST-IN-PLACE CONCRETE SHALL BE AS SPECIFIED IN TABLE 2 ON THIS SHEET, UNLESS NOTED OTHERWISE.
5. UNLESS NOTED OTHERWISE, FOOTING DOWELS FOR CANTILEVERED "RETAINING" WALLS SHALL PROJECT INTO WALL AS SHOWN ON RETAINING WALL SECTION(S).
6. UNLESS NOTED OTHERWISE, FOOTING DOWELS FOR BUILDING WALLS AND PIERS SHALL PROJECT ABOVE THE FOOTING AS REQUIRED TO LAP SPLICE WITH THE VERTICAL WALL/COLUMN REINFORCEMENT.
7. UNLESS NOTED OTHERWISE, ALL SPLICES FOR REINFORCING SHALL BE CLASS B LAP SPLICES. WELDED SPLICES SHALL NOT BE USED.
8. WHEN REINFORCING STEEL IS NOTED AS CONTINUOUS IN GRADE WALLS AND/OR SLABS, SPLICE CONTINUOUS REINFORCING STEEL ONLY WHEN UNAVOIDABLE DUE TO STOCK LENGTHS. STAGGER ALL SPLICES A MINIMUM OF 8'-0". ADJACENT BAR SPLICES ARE NOT ACCEPTABLE.

TABLE 2: CONCRETE PROTECTION

TYPE OF STRUCTURE	NOT EXPOSED TO EARTH OR WEATHER IN SERVICE	EXPOSED TO EARTH OR WEATHER IN SERVICE		EARTH FORMED
		#5 OR SMALLER	#6 OR LARGER	
SLABS	$\frac{3}{4}$"	$1\frac{1}{2}$"	2"	3"
PIERS	---	$1\frac{1}{2}$"	2"	3"
WALLS	---	$1\frac{1}{2}$"	2"	3"
FOOTINGS	---	3"	3"	3"

P. ANCHORS

1. PROPOSED ANCHORS SHALL BE SUBMITTED TO THE PROJECT MANAGER FOR REVIEW AND APPROVAL PRIOR TO FIELD OPERATIONS.
2. ALL ANCHORS SHALL BE INSTALLED IN ACCORDANCE WITH THE RECOMMENDATIONS OF THE MANUFACTURER.
3. EXPANSION ANCHORS (INTO CONCRETE)
   a. SHALL BE HILTI KWIK BOLT TZ ANCHORS MANUFACTURED BY HILTI FASTENING SYSTEMS OR AN APPROVED EQUIVALENT WITH ACCOMPANYING ICC EVALUATION REPORT;
   b. SHALL BE EXTERNALLY THREADED WEDGE BOLT ANCHORS;
   c. SHALL MEET ONE OF THE FOLLOWING REQUIREMENTS:
      i. CARBON STEEL ANCHOR BODY, NUT, AND WASHER HAVING ELECTROPLATED ZINC COATING CONFORMING TO ASTM B633 WITH MINIMUM THICKNESS OF 5 MILS;
      ii. CARBON STEEL HOT-DIP GALVANIZED ANCHOR BODY, NUT, AND WASHER CONFORMING TO ASTM A153 (WEDGES SHALL BE MANUFACTURED FROM EITHER AISI 304 OR AISI 316 STAINLESS STEEL);
      iii. STAINLESS STEEL ANCHOR BODY, NUT, AND WASHER CONFORMING TO AISI 304 (WEDGES SHALL BE MANUFACTURED FROM EITHER AISI 304 OR AISI 316 STAINLESS STEEL);
      iv. STAINLESS STEEL ANCHOR BODY, NUT, AND WASHER CONFORMING TO AISI 316 (WEDGES SHALL BE MANUFACTURED FROM EITHER AISI 304 OR AISI 316 STAINLESS STEEL);
   d. SHALL MEET THE FEDERAL SPECIFICATION A-A 1923A, TYPE 4.
4. IF MINIMUM REQUIREMENTS (EMBEDMENT, SPACING, AND EDGE DISTANCE) FOR ANCHORS CANNOT BE ACHIEVED DUE TO FIELD CONDITIONS, NOTIFY THE PROJECT MANAGER FOR GUIDANCE PRIOR TO DRILLING HOLES FOR ANCHORS.
5. A FIELD TECHNICIAN EMPLOYED BY THE ANCHOR MANUFACTURER SHALL BE ON SITE DURING ALL DRILLING AND INSTALLATION PROCESSES FOR EACH TYPE OF ANCHOR INSTALLED.

QUINN EVANS ARCHITECTS

2121 WARD PLACE, NW
FOURTH FLOOR
WASHINGTON, DC 20007

v 202 298 6700
f 202 298 6666

WWW.QUINNEVANS.COM

FERRY FARM PHASE 1 IMPROVEMENTS M&O BUILDING

268 Kings Hwy, Fredericksburg, VA 22405

QEA # #31402900

STRUCTURAL NOTES

BUILDING PERMIT SUBMISSION
06/30/15

REVISIONS

NO.	DESCRIPTION	DATE

S-001

6/24/2015 1:00:03 PM F:\Proj\13061.01\Drawings\Current\Revit 2014\QWF M&O Building-13061.rvt

STRUCTURAL NOTES CONT

Q. SLABS-ON-GRADE

1. UNLESS NOTED OTHERWISE, SLABS-ON-GRADE SHALL BE 6 INCHES THICK POURED CONCRETE AND REINFORCED WITH #4 BARS AT 12 INCHES ON CENTER EACH WAY LOCATED IN THE UPPER THIRD OF THE SLAB THICKNESS.
2. UNLESS NOTED OTHERWISE, PROVIDE A VAPOR BARRIER WITH A MINIMUM THICKNESS OF 10 MILS, AS LOCATED ON THE DETAILS.
3. FILL UNDER SLABS-ON-GRADE SHALL BE MADE WITH MATERIAL APPROVED BY THE GEOTECHNICAL ENGINEER AND BE COMPACTED IN A MANNER THAT WILL NOT DAMAGE FOUNDATION WALLS. IT SHALL COMPACTED IN COMPLIANCE WITH THE GEOTECHNICAL REPORT.
4. CONSTRUCTION (PLACING, LAP, ETC.) OF REINFORCEMENT SHALL CONFORM TO ACI AND CRSI STANDARDS.
5. PROVIDE A CONTINUOUS SAW CUT OR TOOLED CRACK CONTROL JOINT IN THE TOP OF THE SLAB WHERE INDICATED ON PLAN. CONTROL JOINTS SHALL BE LOCATED ON COLUMN CENTERLINES. SEE DETAIL 3/S-502.
6. PROVIDE AN ISOLATION JOINT AT THE PERIMETER OF THE SLAB UNLESS NOTED OTHERWISE.
7. CONSTRUCTION JOINTS MAY ONLY BE LOCATED AT COLUMN LINES C,D,E, AND F. SEE 2/S-502

R. GENERAL CONTRACTOR

1. STRUCTURAL DRAWINGS SHALL BE USED ONLY IN CONJUNCTION WITH THE ARCHITECTURAL, CIVIL, AND MEP DRAWINGS, WHICH SHALL BE PROVIDED TO ALL SUBCONTRACTORS RESPONSIBLE FOR STRUCTURAL CONSTRUCTION.
2. SHOP DRAWINGS FOR ALL STRUCTURAL ITEMS ARE PART OF THE STRUCTURAL DESIGN AND SHALL BE SUBMITTED TO THE STRUCTURAL ENGINEER OF RECORD FOR REVIEW AND APPROVAL PRIOR TO FABRICATION AND CONSTRUCTION. FAILURE BY THE OWNER OR CONTRACTOR TO SUBMIT SUCH DRAWINGS FOR APPROVAL WILL RELIEVE THE STRUCTURAL ENGINEER OF RECORD OF ALL RESPONSIBILITY FOR CONSTRUCTION DIRECTLY OR INDIRECTLY IMPACTED BY THE FAILURE TO SUBMIT SHOP DRAWINGS.
3. THE FOUNDATION AND SLAB ON GRADE WERE DESIGNED AND DETAILED BASED ON PRELIMINARY FRAME CONFIGURATIONS AND LOADS AND WILL BE REVIEWED AND MAY BE MODIFIED WHEN THE APPROVED FINAL PRE- PRE-ENGINEERED METAL BUILDING CALCULATIONS AND DRAWINGS/SHOP DRAWINGS ARE SUBMITTED. SIGNED AND SEALED DRAWINGS/SHOP DRAWINGS AND CALCULATIONS FOR THE PRE-ENGINEERED METAL BUILDING ARE REQUIRED TO BE SUBMITTED TO THE STRUCTURAL ENGINEER OF RECORD FOR REVIEW, APPROVAL, AND INCORPORATION INTO THE CONTRACT DOCUMENTS PRIOR TO FABRICATION. SEE THE PROJECT SPECIFICATIONS FOR ADDITIONAL REQUIREMENTS.
4. ALL STRUCTURAL ELEMENTS SHALL BE TEMPORARILY SHORED AND BRACED AS REQUIRED TO RESIST THE LOADS TO WHICH THEY MAY BE SUBJECT DURING CONSTRUCTION. THE BRACING/SHORING IS THE RESPONSIBILITY OF THE CONTRACTOR.
5. ALL TEMPORARY SHORING AND BRACING SHALL BE DESIGNED BY A REGISTERED PROFESSIONAL ENGINEER RETAINED BY THE CONTRACTOR AND SHALL REMAIN IN-PLACE UNTIL THE STRUCTURE IS CAPABLE OF SUPPORTING THE LOADS TO WHICH IT MAY BE SUBJECT.
6. SIGNED AND SEALED SHOP DRAWINGS FOR TEMPORARY SHORING AND BRACING SHALL BE SUBMITTED TO THE STRUCTURAL ENGINEER OF RECORD PRIOR TO CONSTRUCTION.
7. REMOVAL OF TEMPORARY SHORING AND BRACING SHALL BE AS DIRECTED BY THE DESIGNED OR THE SHORING AND BRACING.
8. IMPOSED CONSTRUCTION LOADS INCLUDING CRANE LOADS, IN EXCESS OF THE STATED DESIGN LOADS MUST BE APPROVED BY THE STRUCTURAL ENGINEER OF RECORD PRIOR TO THE IMPOSITION OF SUCH LOADS.
9. THE DESIGN AND CONSTRUCTION OF SHORING REQUIRED TO MAINTAIN THE STABILITY OF EXCAVATIONS SHALL BE THE RESPONSIBILITY OF THE CONTRACTOR. ALL EXCAVATIONS SHALL COMPLY WITH OSHA REGULATIONS.
10. PROVIDE CONTINUOUS DRAINAGE SYSTEM BEHIND WALLS BELOW GRADE IN ACCORDANCE WITH THE GEOTECHNICAL REPORT, DETAILS ON SHEETS S-501 AND S-502, AND THE PROJECT SPECIFICATIONS.

LIST OF ABBREVIATIONS

&	AND
@	AT
℄	CENTERLINE
Ø	DIAMETER
(E), EXIST	EXISTING
(H)	HIGH
(L)	LOW
#, NO.	NUMBER
%	PERCENT
ABV	ABOVE
ACI	AMERICAN CONCRETE INSTITUTE
ADDL	ADDITIONAL
ALT	ALTERNATE
ANSI	AMERICAN NATIONAL STANDARDS INSTITUTE
APPROX	APPROXIMATE
ARCH	ARCHITECTURAL
ASCE	AMERICAN SOCIETY OF CIVIL ENGINEERS
ASTM	AMERICAN SOCIETY FOR TESTING AND MATERIALS
BLDG	BUILDING
B.O.	BOTTOM OF
BRG	BEARING
C.J.	CONTROL JOINT
CLR	CLEAR
CMU	CONCRETE MASONRY UNIT
COL	COLUMN
CONC	CONCRETE
CONT	CONTINUOUS
COORD	COORDINATE
CRSI	CONCRETE REINFORCING STEEL INSTITUTE
DIA	DIAMETER
DIM(S)	DIMENSION(S)
DIV	DIVISION
DL	DEAD LOAD
DWG(S)	DRAWING(S)
E.J.	EXPANSION JOINT
E.F.	EACH FACE
EL, ELEV	ELEVATION
ELEC	ELECTRICAL
ELEV'D	ELEVATED
EMBED	EMBEDMENT
EQ	EQUAL
EQUIP	EQUIPMENT
EQUIV	EQUIVALENT
E.W.	EACH WAY
EXT	EXTERIOR
FDN	FOUNDATION
F.S.	FOOTING STEP
FT	FOOT OR FEET
FTG	FOOTING
HORIZ	HORIZONTAL
HT	HEIGHT
IBC	INTERNATIONAL BUILDING CODE
ICC	INTERNATIONAL CODE COUNCIL
IN	INCH
INT	INTERIOR
IJT	JOINT
K	KIP(S)
KSF	KIPS PER SQUARE FOOT
KSI	KIPS PER SQUARE INCH
LB, #	POUNDS
LL	LIVE LOAD
MAS	MASONRY
MAX	MAXIMUM
MECH	MECHANICAL
MEP	MECHANICAL, ELECTRICAL & PLUMBING
MTL	METAL
MFR	MANUFACTURER
MIN	MINIMUM
MISC	MISCELLANEOUS
M.O.	MASONRY OPENING
MPH	MILES PER HOUR
NIC	NOT IN CONTRACT
NOM	NOMINAL
NTS	NOT TO SCALE
O.C.	ON CENTER
OPP	OPPOSITE
PL	PLATE
PEMB	PRE-ENGINEERED METAL BUILDING
PREFAB	PREFABRICATED
PSF	POUNDS PER SQUARE FOOT
PSI	POUNDS PER SQUARE INCH
REINF	REINFORCING, REINFORCEMENT
REQD	REQUIRED
R.O.	ROUGH OPENING
S.F.	SQUARE FEET
SIM	SIMILAR
SOG	SLAB ON GRADE
SPA	SPACES (SPACING)
SPECS	SPECIFICATIONS
STD	STANDARD
T&B	TOP AND BOTTOM
TEMP	TEMPORARY
THRU	THROUGH
T.O.	TOP OF
T&S	TEMPERATURE AND SHRINKAGE
TYP	TYPICAL
U.N.O.	UNLESS NOTED OTHERWISE
VERT	VERTICAL
WL	WIND LOAD
W.O.	WORKING POINT
W/	WITH
W/O	WITHOUT

LEGEND

CONCRETE	STEEL	CMU
GROUT	GRAVEL	SOLID CMU
EARTH	BRICK	EXISTING
STONE	FOAM	

QUINN EVANS ARCHITECTS

2121 WARD PLACE, NW
FOURTH FLOOR
WASHINGTON, DC 20007

v 202 298 6700
f 202 298 6666

WWW.QUINNEVANS.COM

FERRY FARM PHASE 1 IMPROVEMENTS M&O BUILDING

268 Kings Hwy, Fredericksburg, VA 22405

QEA # #31402900

STRUCTURAL NOTES

BUILDING PERMIT SUBMISSION
06/30/15

REVISIONS

NO.	DESCRIPTION	DATE

S-002

6/24/2015 1:00:04 PM F:\Proj\13\061\01\Drawings\Current\Revit 2014\QVF M&O Building-130601.rvt

STRUCTURAL NOTES FOR QUALITY ASSURANCE PLAN AND SPECIAL INSPECTION

A. SPECIAL INSPECTIONS GENERAL

THE OWNER SHALL ENGAGE A QUALIFIED SPECIAL INSPECTOR TO IMPLEMENT THE SPECIAL INSPECTIONS PROGRAM AND TO PERFORM INSPECTIONS DURING CONSTRUCTION ON THE TYPES OF WORK LISTED UNDER SECTION 1704 OF IBC 2009. FOR REFERENCE, A SUMMARY OF SPECIAL INSPECTIONS HAS BEEN PROVIDE BELOW. THESE INSPECTIONS ARE IN ADDITION TO THE INSPECTIONS IDENTIFIED IN SECTION 110 OF IBC 2009.

THE CONSTRUCTION OF THE PRE-ENGINEERED METAL BUILDING SHALL BE INCLUDED IN THE SPECIAL INSPECTIONS.

REFERENCE THE SPECIFICATIONS FOR ADDITIONAL SPECIAL INSPECTION REQUIREMENTS FOR THE PROJECT. THE SPECIAL INSPECTION REQUIREMENTS SHALL BE STATED IN THE STATEMENT OF SPECIAL INSPECTIONS, SCHEDULE OF INSPECTION AND TESTING AGENCIES, QUALITY ASSURANCE PLANS, AND QUALIFICATIONS OF INSPECTORS AND TESTING AGENCIES, AND THE SCHEDULE OF SPECIAL INSPECTIONS LISTED BELOW. IF THERE ARE ANY PERCEIVED CONFLICTS BETWEEN THE SPECIFICATIONS AND THE NOTES OR THE DRAWINGS, THE CONTRACTOR SHALL SUBMIT A WRITTEN REQUEST FOR CLARIFICATION TO THE PROJECT MANAGER .

B. QUALIFICATIONS OF SPECIAL INSPECTORS

THE MINIMUM QUALIFICATIONS OF PERSONNEL PERFORMING SPECIAL INSPECTIONS ARE STATED IN THE STATEMENT OF SPECIAL INSPECTIONS INCLUDED IN THE SPECIFICATIONS FOR THE PROJECT. THE SPECIAL INSPECTOR SHALL BE A QUALIFIED PERSON WHO SHALL DEMONSTRATE COMPETENCE, TO THE SATISFACTION OF THE PROJECT MANAGER, FOR THE INSPECTION OF THE PARTICULAR TYPE OF CONSTRUCTION OR OPERATION REQUIRING SPECIAL INSPECTION. THE REGISTERED DESIGN PROFESSIONAL IN RESPONSIBLE CHARGE AND ENGINEERS OF RECORD INVOLVED IN THE DESIGN OF THE PROJECT ARE PERMITTED TO ACT AS THE APPROVED AGENCY AND THEIR PERSONNEL ARE PERMITTED TO ACT AS THE SPECIAL INSPECTOR FOR THE WORK DESIGNATED TO THEM, PROVIDED THOSE PERSONNEL MEET THE QUALIFICATION REQUIREMENTS STATED ABOVE TO THE SATISFACTION OF THE PROJECT MANAGER. THE SPECIAL INSPECTOR SHALL PROVIDE WRITTEN DOCUMENTATION TO THE PROJECT MANAGER DEMONSTRATING HIS OR HER COMPETENCE AND RELEVANT EXPERIENCE OR TRAINING. EXPERIENCE OR TRAINING SHALL BE CONSIDERED RELEVANT WHEN THE DOCUMENTED EXPERIENCE OR TRAINING IS RELATED IN COMPLEXITY TO THE SAME TYPE OF SPECIAL INSPECTION ACTIVITIES FOR PROJECTS OF SIMILAR COMPLEXITY AND MATERIAL QUALITIES. THESE QUALIFICATIONS ARE IN ADDITION TO QUALIFICATIONS SPECIFIED IN OTHER SECTIONS OF THE IBC 2009 AND THE SPECIFICATIONS.

C. REPORT REQUIREMENTS

SPECIAL INSPECTORS SHALL KEEP RECORDS OF INSPECTIONS. THE SPECIAL INSPECTOR SHALL FURNISH INSPECTION REPORTS TO THE PROJECT MANAGER, AND TO THE REGISTERED DESIGN PROFESSIONAL IN RESPONSIBLE CHARGE. REPORTS SHALL INDICATE THAT WORK INSPECTED WAS OR WAS NOT COMPLETED IN CONFORMANCE TO APPROVED CONSTRUCTION DOCUMENTS. DISCREPANCIES SHALL BE BROUGHT TO THE IMMEDIATE ATTENTION OF THE CONTRACTOR FOR CORRECTION. IF THEY ARE NOT CORRECTED, THE DISCREPANCIES SHALL BE BROUGHT TO THE ATTENTION OF THE PROJECT MANAGER AND TO THE REGISTERED DESIGN PROFESSIONAL IN RESPONSIBLE CHARGE PRIOR TO THE COMPLETION OF THAT PHASE OF THE WORK. A FINAL REPORT DOCUMENTING REQUIRED SPECIAL INSPECTIONS AND CORRECTION OF ANY DISCREPANCIES NOTED IN THE INSPECTIONS SHALL BE SUBMITTED AT A POINT IN TIME AGREED UPON AT THE PRECONSTRUCTION MEETING.

THE FOLLOWING SAMPLE FORMS ARE INCLUDED IN THE SPECIFICATIONS:

1. STATEMENT OF SPECIAL INSPECTIONS.
2. FINAL REPORT OF SPECIAL INSPECTIONS.
3. CONTRACTOR'S STATEMENT OF RESPONSIBILITY.
4. FABRICATOR'S CERTIFICATE OF COMPLIANCE.

THE FORMS LISTED ABOVE SHALL BE FURNISHED TO THE PROJECT MANAGER.

D. STATEMENT OF CONTRACTOR RESPONSIBILITY

EACH CONTRACTOR RESPONSIBLE FOR THE CONSTRUCTION OF A MAIN WIND- OR SEISMIC-FORCE-RESISTING SYSTEM, DESIGNATED SEISMIC SYSTEM OR A WIND- OR SEISMIC-RESISTING COMPONENT LISTED IN THE STATEMENT OF SPECIAL INSPECTIONS SHALL SUBMIT A WRITTEN STATEMENT OF RESPONSIBILITY TO THE PROJECT MANAGER AND THE OWNER PRIOR TO THE COMMENCEMENT OF WORK ON THE SYSTEM OR COMPONENT. THE CONTRACTOR'S STATEMENT OF RESPONSIBILITY SHALL CONTAIN ACKNOWLEDGMENT OF AWARENESS OF THE SPECIAL REQUIREMENTS CONTAINED IN THE STATEMENT OF SPECIAL INSPECTION.

E. FABRICATOR APPROVAL

WHERE FABRICATION OF STRUCTURAL LOAD-BEARING MEMBERS AND ASSEMBLIES IS BEING PERFORMED ON THE PREMISES OF A FABRICATOR'S SHOP, THE SPECIAL INSPECTOR SHALL VERIFY THAT THE FABRICATOR MAINTAINS DETAILED FABRICATION AND QUALITY CONTROL PROCEDURES THAT PROVIDE A BASIS FOR INSPECTION CONTROL OF THE WORKMANSHIP AND THE FABRICATOR'S ABILITY TO CONFORM TO APPROVED CONSTRUCTION DOCUMENTS AND REFERENCED STANDARDS. THE SPECIAL INSPECTOR SHALL REVIEW THE PROCEDURES FOR COMPLETENESS AND ADEQUACY RELATIVE TO THE CODE REQUIREMENTS FOR THE FABRICATOR'S SCOPE OF WORK.

SPECIAL INSPECTIONS REQUIRED BY SECTION 1704 OF IBC 2009 ARE NOT REQUIRED WHERE THE WORK IS DONE ON THE PREMISES OF A FABRICATOR REGISTERED AND APPROVED TO PERFORM SUCH WORK WITHOUT SPECIAL INSPECTION. APPROVAL SHALL BE BASED UPON REVIEW OF THE FABRICATOR'S WRITTEN PROCEDURAL AND QUALITY CONTROL MANUALS AND PERIODIC AUDITING OF FABRICATION PRACTICES BY AN APPROVED SPECIAL INSPECTION AGENCY. AT COMPLETION OF FABRICATION, THE APPROVED FABRICATOR SHALL SUBMIT A CERTIFICATE OF COMPLIANCE TO THE PROJECT MANAGER STATING THAT THE WORK WAS PERFORMED IN ACCORDANCE WITH THE APPROVED CONSTRUCTION DOCUMENTS.

F. MINIMUM INSPECTION REQUIREMENTS:

THE REQUIREMENTS LISTED BELOW, FOR EACH TRADE, REPRESENT THE MINIMUM SPECIAL INSPECTION REQUIREMENTS DICTATED BY THE CODE FOR THIS PROJECT. ADDITIONAL INSPECTIONS FOR SPECIAL CASES MAY BE REQUIRED, AT THE DISCRETION OF THE BUILDING OFFICIAL AND PROJECT MANAGER, AS STATED IN SECTION 1704.15 OF IBC 2009 AND AS FOLLOWS:

1. CONSTRUCTION MATERIALS AND SYSTEMS THAT ARE ALTERNATIVES TO MATERIALS AND SYSTEMS PRESCRIBED BY THE IBC 2009.
2. UNUSUAL DESIGN APPLICATIONS OF MATERIALS DESCRIBED IN THE IBC 2009.
3. MATERIALS AND SYSTEMS REQUIRED TO BE INSTALLED IN ACCORDANCE WITH ADDITIONAL MANUFACTURER'S INSTRUCTIONS THAT PRESCRIBE REQUIREMENTS NOT CONTAINED IN THE IBC 2009 OR IN STANDARDS REFERENCED BY THE IBC 2009.

THE MINIMUM SPECIAL INSPECTION REQUIREMENTS OUTLINED BELOW ARE PART OF THE CONTRACT DOCUMENTS FOR THIS PROJECT. THE INSPECTIONS STATED BELOW MUST BE PERFORMED FOR THE WORK SHOWN ON THESE DRAWINGS AND CANNOT BE WAIVED. INSPECTIONS SHALL FULFILL THE REQUIREMENTS OF BOTH THE CONTRACT DOCUMENTS AND THE SPECIAL INSPECTIONS PROGRAM.

CONTINUOUS SPECIAL INSPECTION IS THE FULL-TIME OBSERVATION OF THE WORK, REQUIRING SPECIAL INSPECTION, BY AN APPROVED SPECIAL INSPECTOR WHO IS PRESENT IN THE WORK AREA WHENEVER WORK IS BEING PERFORMED.

PERIODIC SPECIAL INSPECTION IS THE PART-TIME OR INTERMITTENT OBSERVATION OF THE WORK, REQUIRING SPECIAL INSPECTION, BY AN APPROVED SPECIAL INSPECTOR WHO IS PRESENT IN THE WORK AREA WHILE WORK IS BEING PERFORMED. THE PART-TIME OR INTERMITTENT OBSERVATION PERIODS SHALL BE AT THE COMMENCEMENT AND COMPLETION OF THE WORK, AT TIMES OF SIGNIFICANT WORK, SHALL OCCUR OVER THE COMPLETE WORK PERIOD, AND TOTAL AT LEAST 25 PERCENT OF THE TOTAL WORK TIME.

G. STATEMENT OF SPECIAL INSPECTIONS: WIND RESISTANCE

1. BASIC WIND SPEED (3 SECOND GUST): 90 MPH.
2. WIND EXPOSURE CATEGORY: B.
3. DESCRIPTION OF MAIN WIND-FORCE-RESISTING SYSTEMS AND DESIGNATED WIND-RESISTING COMPONENTS SHALL BE PROVIDED BY THE PRE-ENGINEERED METAL BUILDING MANUFACTURER:
   a. MAIN WIND-FORCE-RESISTING SYSTEM .
   b. WIND-RESISTING SYSTEMS AND COMPONENTS:
      1) ROOF CLADDING AND ROOF FRAMING CONNECTIONS
      2) WALL CONNECTIONS TO ROOF AND FLOOR DIAPHRAGMS AND FRAMING
      3) ROOF AND FLOOR DIAPHRAGM SYSTEMS, INCLUDING COLLECTORS, DRAG STRUTS AND BOUNDARY ELEMENTS
      4) VERTICAL WIND-FORCE-RESISTING SYSTEMS, INCLUDING BRACED FRAMES, MOMENT FRAMES AND SHEAR WALLS
      5) WIND-FORCE-RESISTING SYSTEM CONNECTIONS TO THE FOUNDATION.
      6) FABRICATION AND INSTALLATION OF SYSTEMS OR COMPONENTS REQUIRED TO MEET THE IMPACT-RESISTANCE REQUIREMENTS OF SECTION 1609.1.2 OF IBC 2009.

H. SPECIAL INSPECTIONS FOR WIND REQUIREMENTS

1. IBC 2009, SECTION 1706.2 STRUCTURAL WOOD: CONTINUOUS SPECIAL INSPECTION IS REQUIRED DURING FIELD GLUING OPERATIONS OF ELEMENTS OF THE MAIN WINDFORCE-RESISTING SYSTEM. PERIODIC SPECIAL INSPECTION IS REQUIRED FOR NAILING, BOLTING, ANCHORING AND OTHER FASTENING OF COMPONENTS WITHIN THE MAIN WINDFORCE-RESISTING SYSTEM, INCLUDING WOOD SHEAR WALLS, WOOD DIAPHRAGMS, DRAG STRUTS, BRACES AND HOLD-DOWNS.
2. IBC 2009, SECTION 1706.3 COLD-FORMED STEEL LIGHT-FRAMED CONSTRUCTION: PERIODIC SPECIAL INSPECTION IS REQUIRED DURING WELDING OPERATIONS OF ELEMENTS OF THE MAIN WINDFORCE-RESISTING SYSTEM. PERIODIC SPECIAL INSPECTION IS REQUIRED FOR SCREW ATTACHMENT, BOLTING, ANCHORING AND OTHER FASTENING OF COMPONENTS WITHIN THE MAIN WINDFORCE-RESISTING SYSTEM, INCLUDING SHEAR WALLS, BRACES, DIAPHRAGMS, COLLECTIONS (DRAG STRUTS) AND HOLD-DOWNS.
3. IBC 2009, SECTION 1706.4 WIND-RESISTING COMPONENTS: PERIODIC SPECIAL INSPECTION IS REQUIRED FOR THE FOLLOWING SYSTEMS AND COMPONENTS:
   a. ROOF CLADDING.
   b. WALL CLADDING.

I. STATEMENT OF SPECIAL INSPECTIONS: SEISMIC RESISTANCE

1. SEISMIC DESIGN CATEGORY: D.
2. DESCRIPTION OF SEISMIC-FORCE-RESISTING SYSTEM AND DESIGNATED SEISMIC SYSTEMS:
   a. SEISMIC-FORCE-RESISTING SYSTEM PER ASCE 7-05, TABLE 12.2.1:
   b. THE FOLLOWING ADDITIONAL SYSTEMS AND COMPONENTS IN STRUCTURES ASSIGNED TO SEISMIC DESIGN CATEGORY D:
      1) SYSTEMS REQUIRED FOR SEISMIC DESIGN CATEGORY C.
      2) EXTERIOR WALL PANELS AND THEIR ANCHORAGE.
      3) SUSPENDED CEILING SYSTEMS AND THEIR ANCHORAGE.
      4) ACCESS FLOORS AND THEIR ANCHORAGE.
      5) STEEL STORAGE RACKS AND THEIR ANCHORAGE, WHERE THE IMPORTANCE FACTOR IS EQUAL TO 1.5 IN ACCORDANCE WITH SECTION 15.5.3 OF ASCE 7.

J. SPECIAL INSPECTIONS FOR SEISMIC RESISTANCE

1. IBC 2009, SECTION 1707.2 STRUCTURAL STEEL: SPECIAL INSPECTION FOR STRUCTURAL STEEL SHALL BE IN ACCORDANCE WITH THE QUALITY ASSURANCE PLAN REQUIREMENTS OF AISC 341.
2. IBC 2009, SECTION 1707.3 STRUCTURAL WOOD: CONTINUOUS SPECIAL INSPECTION IS REQUIRED DURING FIELD GLUING OPERATIONS OF ELEMENTS OF THE SEISMIC-FORCE-RESISTING SYSTEM. PERIODIC SPECIAL INSPECTION IS REQUIRED FOR NAILING, BOLTING, ANCHORING AND OTHER FASTENING OF COMPONENTS WITHIN THE SEISMIC-FORCE-RESISTING SYSTEM, INCLUDING WOOD SHEAR WALLS, WOOD DIAPHRAGMS, DRAG STRUTS, BRACES, SHEAR PANELS AND HOLD-DOWNS.
3. IBC 2009, SECTION 1707.4 COLD-FORMED STEEL LIGHT-FRAMED CONSTRUCTION: PERIODIC SPECIAL INSPECTION IS REQUIRED DURING WELDING OPERATIONS OF ELEMENTS OF THE SEISMIC-FORCE-RESISTING SYSTEM. PERIODIC SPECIAL INSPECTION IS REQUIRED FOR SCREW ATTACHMENT, BOLTING, ANCHORING AND OTHER FASTENING OF COMPONENTS WITHIN THE SEISMIC-FORCE-RESISTING SYSTEM, INCLUDING SHEAR WALLS, BRACES, DIAPHRAGMS, COLLECTORS (DRAG STRUTS) AND HOLD-DOWNS.
4. IBC 2009, SECTION 1707.5 STORAGE RACKS AND ACCESS FLOORS: PERIODIC SPECIAL INSPECTION IS REQUIRED DURING THE ANCHORAGE OF ACCESS FLOORS AND STORAGE RACKS 8 FEET OR GREATER IN HEIGHT IN STRUCTURES ASSIGNED TO SEISMIC DESIGN CATEGORY D, E OR F.
5. IBC 2009, SECTION 1707.6 ARCHITECTURAL COMPONENTS: PERIODIC SPECIAL INSPECTION DURING THE ERECTION AND FASTENING OF EXTERIOR CLADDING, INTERIOR AND EXTERIOR NONBEARING WALLS AND INTERIOR AND EXTERIOR VENEER IN STRUCTURES ASSIGNED TO SEISMIC DESIGN CATEGORY D, E OR F.
6. IBC 2009, SECTION 1707.7 MECHANICAL AND ELECTRICAL COMPONENTS: SPECIAL INSPECTION FOR MECHANICAL AND ELECTRICAL EQUIPMENT SHALL BE AS FOLLOWS:
   a. PERIODIC SPECIAL INSPECTION IS REQUIRED DURING THE ANCHORAGE OF ELECTRICAL EQUIPMENT FOR EMERGENCY OR STANDBY POWER SYSTEMS IN STRUCTURES ASSIGNED TO SEISMIC DESIGN CATEGORY C, D, E OR F.
   b. PERIODIC SPECIAL INSPECTION IS REQUIRED DURING THE INSTALLATION OF ANCHORAGE OF OTHER ELECTRICAL EQUIPMENT IN STRUCTURES ASSIGNED TO SEISMIC DESIGN CATEGORY E OR F.
   c. PERIODIC SPECIAL INSPECTION IS REQUIRED DURING INSTALLATION OF PIPING SYSTEMS INTENDED TO CARRY FLAMMABLE, COMBUSTIBLE OR HIGHLY TOXIC CONTENTS AND THEIR ASSOCIATED MECHANICAL UNITS IN STRUCTURES ASSIGNED TO SEISMIC DESIGN CATEGORY C, D, E OR F.
   d. PERIODIC SPECIAL INSPECTION IS REQUIRED DURING THE INSTALLATION OF HVAC DUCTWORK THAT WILL CONTAIN HAZARDOUS MATERIALS IN STRUCTURES ASSIGNED TO SEISMIC DESIGN CATEGORY C, D, E OR F.
   e. PERIODIC SPECIAL INSPECTION IS REQUIRED DURING THE INSTALLATION OF VIBRATION ISOLATION SYSTEMS IN STRUCTURES ASSIGNED TO SEISMIC DESIGN CATEGORY C, D, E OR F WHERE THE CONSTRUCTION DOCUMENTS REQUIRE A NOMINAL CLEARANCE OF ONE INCH OR LESS BETWEEN THE EQUIPMENT SUPPORT FRAME AND RESTRAINT.
7. IBC 2009, SECTION 1707.8 DESIGNATED SEISMIC SYSTEM VERIFICATIONS: THE SPECIAL INSPECTOR SHALL EXAMINE DESIGNATED SEISMIC SYSTEMS REQUIRING SEISMIC QUALIFICATION IN ACCORDANCE WITH SECTION 1708.4 OF IBC 2009 AND VERIFY THAT THE LABEL, ANCHORAGE OR MOUNTING CONFORMS TO THE CERTIFICATE OF COMPLIANCE.
8. IBC 2009, SECTION 1707.9 SEISMIC ISOLATION SYSTEM: PERIODIC SPECIAL INSPECTION IS REQUIRED DURING THE FABRICATION AND INSTALLATION OF ISOLATOR UNITS AND ENERGY DISSIPATION DEVICES THAT ARE PART OF THE SEISMIC ISOLATION SYSTEM.

K. STRUCTURAL TESTING FOR SEISMIC RESISTANCE

1. IBC 2009, SECTION 1708.2 CONCRETE REINFORCEMENT: WHERE REINFORCEMENT COMPLYING WITH ASTM A 615 IS USED TO RESIST EARTHQUAKE-INDUCED FLEXURAL AND AXIAL FORCES IN SPECIAL MOMENT FRAMES, SPECIAL STRUCTURAL WALLS AND COUPLING BEAMS CONNECTING SPECIAL STRUCTURAL WALLS, IN STRUCTURES ASSIGNED TO SEISMIC DESIGN CATEGORY B, C, D, E, OR F AS DETERMINED IN SECTION 1613 OF IBC 2009, THE REINFORCEMENT SHALL COMPLY WITH SECTION 21.1.5.2 OF ACI 318. CERTIFIED MILL TEST REPORTS SHALL BE PROVIDED FOR EACH SHIPMENT OF SUCH REINFORCEMENT. WHERE REINFORCEMENT COMPLYING WITH ASTM A 615 IS TO BE WELDED, CHEMICAL TESTS SHALL BE PERFORMED TO DETERMINE WELDABILITY IN ACCORDANCE WITH SECTION 3.5.2 OF ACI 318.
2. IBC 2009, SECTION 1708.3 STRUCTURAL STEEL: TESTING FOR STRUCTURAL STEEL SHALL BE IN ACCORDANCE WITH THE QUALITY ASSURANCE PLAN REQUIREMENTS OF AISC 341.
3. IBC 2009, SECTION 1708.4 SEISMIC CERTIFICATION OF NONSTRUCTURAL COMPONENTS:
   a. THE MANUFACTURER OF EACH DESIGNATED SEISMIC SYSTEM COMPONENTS SUBJECT TO THE PROVISIONS OF ASCE 7 SECTION 13.2.2 SHALL TEST OR ANALYZE THE COMPONENT AND ITS MOUNTING SYSTEM OR ANCHORAGE AND SUBMIT A CERTIFICATE OF COMPLIANCE FOR REVIEW AND ACCEPTANCE BY THE REGISTERED DESIGN PROFESSIONAL RESPONSIBLE FOR THE DESIGN OF THE DESIGNATED SEISMIC SYSTEM AND FOR APPROVAL BY THE PROJECT MANAGER. CERTIFICATION SHALL BE BASED ON AN ACTUAL TEST ON A SHAKE TABLE, BY THREE-DIMENSIONAL SHOCK TESTS, BY AN ANALYTICAL METHOD USING DYNAMIC CHARACTERISTICS AND FORCES, BY THE USE OF EXPERIENCE DATA (i.e., HISTORICAL DATA DEMONSTRATING ACCEPTABLE SEISMIC PERFORMANCE) OR BY MORE RIGOROUS ANALYSIS PROVIDING FOR EQUIVALENT SAFETY.
   b. MANUFACTURER'S CERTIFICATION OF COMPLIANCE FOR THE GENERAL DESIGN REQUIREMENTS OF ASCE 7 SECTION 13.2.1 SHALL BE BASED ON ANALYSIS, TESTING OR EXPERIENCE DATA.
4. IBC 2009, SECTION 1708.5 SEISMICALLY ISOLATED STRUCTURES: FOR REQUIRED SYSTEM TESTS, SEE SECTION 17.8 OF ASCE 7.

L. SUMMARY OF SPECIAL INSPECTIONS

1. TABLES INCLUDED BELOW ARE TAKEN DIRECTLY FROM IBC 2009, SECTIONS NOT REQUIRED ARE LISTED AS NOT APPLICABLE. ADDITIONAL INSPECTION REQUIREMENTS ARE LISTED IN TABLES LABELED SUPPLEMENTAL INSPECTION REQUIREMENTS.
2. REQUIRED VERIFICATION AND INSPECTION OF STEEL CONSTRUCTION, SEE TABLE 1704.3.
3. REQUIRED VERIFICATION AND INSPECTION OF CONCRETE CONSTRUCTION, SEE TABLE 1704.4.
4. LEVEL 1 REQUIRED VERIFICATION AND INSPECTION OF MASONRY CONSTRUCTION, SEE TABLE 1704.5.1. LEVEL 1 MASONRY CONSTRUCTION IS APPLICABLE FOR THE FOLLOWING:
   a. EMPIRICALLY DESIGNED MASONRY, GLASS UNIT MASONRY AND MASONRY VENEER IN OCCUPANCY CATEGORY IV.
   b. ENGINEERED MASONRY IN OCCUPANCY CATEGORY I, II OR III.
5. LEVEL 2 REQUIRED VERIFICATION AND INSPECTION OF MASONRY CONSTRUCTION, SEE TABLE 1704.5.3. LEVEL 2 MASONRY CONSTRUCTION IS APPLICABLE FOR ENGINEERED MASONRY IN OCCUPANCY CATEGORY IV.
6. REQUIRED VERIFICATION AND INSPECTION OF SOILS, SEE TABLE 1704.7.
7. REQUIRED VERIFICATION AND INSPECTION OF DRIVEN DEEP FOUNDATION ELEMENTS, SEE TABLE 1704.8.
8. REQUIRED VERIFICATION AND INSPECTION OF CAST-IN-PLACE DEEP FOUNDATION ELEMENTS, SEE TABLE 1704.9.

QUINN EVANS ARCHITECTS

2121 WARD PLACE, NW
FOURTH FLOOR
WASHINGTON, DC 20007

v 202 298 6700
f 202 298 6666

WWW.QUINNEVANS.COM

FERRY FARM PHASE 1 IMPROVEMENTS M&O BUILDING

268 Kings Hwy, Fredericksburg, VA 22405

QEA # #31402900

SPECIAL INSPECTION NOTES

BUILDING PERMIT SUBMISSION
06/30/15

REVISIONS

NO.	DESCRIPTION	DATE

S-003

6/24/2015 1:00:04 PM F:\Proj\13061.01\Drawings\Current\Revit 2014\QWF M&O Building-13061.rvt

IBC 2009 - TABLE 1704.3
REQUIRED VERIFICATION AND INSPECTION OF STEEL CONSTRUCTION

VERIFICATION AND INSPECTION	CONTINUOUS	PERIODIC	NOT APPLICABLE	REFERENCED STANDARD
1. MATERIAL VERIFICATION OF HIGH-STRENGTH BOLTS, NUTS AND WASHERS:				
a. IDENTIFICATION MARKINGS TO CONFORM TO ASTM STANDARDS SPECIFIED IN THE APPROVED CONSTRUCTION DOCUMENTS.	---	X	---	AISC 360, SECTION A3.3 AND APPLICABLE ASTM MATERIAL STANDARDS
b. MANUFACTURER'S CERTIFICATE OF COMPLIANCE REQUIRED.	---	X	---	---
2. INSPECTION OF HIGH-STRENGTH BOLTING:				
a. SNUG-TIGHT JOINTS.	---	X	---	AISC 360, SECTION M2.5
b. PRETENSIONED AND SLIP-CRITICAL JOINTS USING TURN-OF-NUT WITH MATCHMARKING, TWIST-OFF BOLT OR DIRECT TENSION INDICATOR METHODS OF INSTALLATION.	---	X	---	
c. PRETENSIONED AND SLIP-CRITICAL JOINTS USING TURN-OF-NUT WITHOUT MATCHMARKING OR CALIBRATED WRENCH METHODS OF INSTALLATION.	X	---	---	
3. MATERIAL VERIFICATION OF STRUCTURAL STEEL AND COLD-FORMED STEEL DECK:				
a. FOR STRUCTURAL STEEL, IDENTIFICATION MARKINGS TO CONFORM TO AISC 360.	---	X	---	AISC 360, SECTION M5.5
b. FOR OTHER STEEL, IDENTIFICATION MARKINGS TO CONFORM TO ASTM STANDARDS SPECIFIED IN THE APPROVED CONSTRUCTION DOCUMENTS.	---	X	---	APPLICABLE ASTM MATERIAL STANDARDS
c. MANUFACTURER'S CERTIFIED TEST REPORTS.	---	X	---	---
4. MATERIAL VERIFICATION OF WELD FILLER MATERIALS:				
a. IDENTIFICATION MARKINGS TO CONFORM TO AWS SPECIFICATION IN THE APPROVED CONSTRUCTION DOCUMENTS.	---	X	---	AISC 360, SECTION A3.5 AND APPLICABLE AWS A5 DOCUMENTS
b. MANUFACTURER'S CERTIFICATE OF COMPLIANCE REQUIRED.	---	X	---	---
5. INSPECTION OF WELDING:				
a. STRUCTURAL STEEL AND COLD-FORMED STEEL DECK:				
1) COMPLETE AND PARTIAL JOINT PENETRATION GROOVE WELDS.	X	---	---	AWS D1.1
2) MULTIPASS FILLET WELDS.	X	---	---	
3) SINGLE-PASS FILLET WELDS > $\frac{5}{16}$".	X	---	---	
4) PLUG AND SLOT WELDS.	X	---	---	
5) SINGLE-PASS FILLET WELDS ≤ $\frac{5}{16}$".	---	X	---	
6) FLOOR AND ROOF DECK WELDS.	---	X	---	AWS D1.3
b. REINFORCING STEEL:				
1) VERIFICATION OF WELDABILITY OF REINFORCING STEEL OTHER THAN ASTM A 706.	---	X	---	AWS D1.4 ACI 318: SECTION 3.5.2
2) REINFORCING STEEL RESISTING FLEXURAL AND AXIAL FORCES IN INTERMEDIATE AND SPECIAL MOMENT FRAMES, AND BOUNDARY ELEMENTS OF SPECIAL STRUCTURAL WALLS OF CONCRETE AND SHEAR REINFORCEMENT.	X	---	---	
3) SHEAR REINFORCEMENT.	X	---	---	
4) OTHER REINFORCING STEEL.	---	X	---	
6. INSPECTION OF STEEL FRAME JOINT DETAILS FOR COMPLIANCE:				
a. DETAILS SUCH AS BRACING AND STIFFENING.	---	X	---	---
b. MEMBER LOCATIONS.	---	X	---	
c. APPLICATION OF JOINT DETAILS AT EACH CONNECTION.	---	X	---	

SUPPLEMENTAL INSPECTION REQUIRED
OF STEEL CONSTRUCTION

VERIFICATION AND INSPECTION	CONTINUOUS	PERIODIC	NOT APPLICABLE
S1. FABRICATOR CERTIFICATION / QUALITY CONTROL PROCEDURES			
a. REVIEW SHOP FABRICATION AND QUALITY CONTROL PROCEDURES.	---	X	---
S2. WELDING			
a. VISUALLY INSPECT ALL WELDS.	---	X	---
b. INSPECT PRE-HEAT, POST-HEAT AND SURFACE PREPARATION BETWEEN PASSES.	---	X	---
c. VERIFY SIZE AND LENGTH OF FILLET WELDS.	---	X	---
d. ULTRASONIC TESTING OF ALL FULL-PENETRATION WELDS.	---	---	---
S3. SHEAR CONNECTORS			
a. INSPECT SIZE, NUMBER, POSITIONING AND WELDING OF SHEAR CONNECTORS. INSPECT STUDS FOR FULL 360 DEGREE FLASH. RING TEST ALL SHEAR CONNECTORS WITH A 3 LB HAMMER. BEND TEST ALL QUESTIONABLE STUDS TO 15 DEGREES.	---	---	X
S4. STRUCTURAL DETAILS			
a. INSPECT STEEL FRAME FOR COMPLIANCE WITH STRUCTURAL DRAWINGS, INCLUDING BRACING, MEMBER CONFIGURATION AND CONNECTION DETAILS.	---	X	---

IBC 2009 - TABLE 1704.4
REQUIRED VERIFICATION AND INSPECTION OF CONCRETE CONSTRUCTION

VERIFICATION AND INSPECTION	CONTINUOUS	PERIODIC	NOT APPLICABLE	REFERENCED STANDARD
1. INSPECTION OF REINFORCING STEEL, INCLUDING PRESTRESSING TENDONS, AND PLACEMENT.	---	X	---	ACI 318: 3.5, 7.1-7.7
2. INSPECTION OF REINFORCING STEEL WELDING IN ACCORDANCE WITH TABLE 1704.3, ITEM 5b.	---	---	X	AWS D1.4 ACI 318: 3.5.2
3. INSPECTION OF BOLTS TO BE INSTALLED IN CONCRETE PRIOR TO AND DURING PLACEMENT OF CONCRETE WHERE ALLOWABLE LOADS HAVE BEEN INCREASED OR WHERE STRENGTH DESIGN IS USED.	X	---	---	ACI 318: 8.1.3, 21.2.8
4. INSPECTION OF ANCHORS INSTALLED IN HARDENED CONCRETE.	---	X	---	ACI 318: 3.8.6, 8.1.3, 21.2.8
5. VERIFYING USE OF REQUIRED MIX DESIGN.	---	X	---	ACI 318: CHAPTER 4, 5.2-5.4
6. AT THE TIME FRESH CONCRETE IS SAMPLED TO FABRICATE SPECIMENS FOR STRENGTH TESTS, PERFORM SLUMP AND AIR CONTENT TESTS, AND DETERMINE THE TEMPERATURE OF THE CONCRETE.	X	---	---	ASTM C 172 ASTM C 31 ACI 318: 5.6, 5.8
7. INSPECTION OF CONCRETE AND SHOTCRETE PLACEMENT FOR PROPER APPLICATION TECHNIQUES.	X	---	---	ACI 318: 5.9, 5.10
8. INSPECTION FOR MAINTENANCE OF SPECIFIED CURING TEMPERATURE AND TECHNIQUES.	---	X	---	ACI 318: 5.11-5.13
9. INSPECTION OF PRESTRESSED CONCRETE:				
a. APPLICATION OF PRESTRESSING FORCES.	X	---	---	ACI 318: 18.20
b. GROUTING OF BONDED PRESTRESSING TENDONS IN THE SEISMIC-FORCE-RESISTING SYSTEM.	X	---	---	ACI 318: 18.18.4
10. ERECTION OF PRECAST CONCRETE MEMBERS.	---	X	---	ACI 318: CHAPTER 16
11. VERIFICATION OF IN-SITU CONCRETE STRENGTH, PRIOR TO STRESSING OF TENDONS IN POSTTENSIONED CONCRETE AND PRIOR TO REMOVAL OF SHORES AND FORMS FROM BEAMS AND STRUCTURAL SLABS.	---	X	---	ACI 318: 6.2
12. INSPECT FORMWORK FOR SHAPE, LOCATION AND DIMENSIONS OF THE CONCRETE MEMBER BEING FORMED.	---	X	---	ACI 318: 6.1.1

QUINN EVANS ARCHITECTS

2121 WARD PLACE, NW
FOURTH FLOOR
WASHINGTON, DC 20007

v 202 298 6700
f 202 298 6666

WWW.QUINNEVANS.COM

FERRY FARM PHASE 1 IMPROVEMENTS M&O BUILDING

268 Kings Hwy, Fredericksburg, VA 22405

QEA # #31402900

SPECIAL INSPECTION NOTES

BUILDING PERMIT SUBMISSION
06/30/15

REVISIONS

NO.	DESCRIPTION	DATE

S-004

6/24/2015 1:00:04 PM F:\Proj\13061-01\Drawings\Current\Revit 2014\QWF M&O Building-13061R1.rvt

SUPPLEMENTAL INSPECTION REQUIRED OF CONCRETE CONSTRUCTION

VERIFICATION AND INSPECTION	CONTINUOUS	PERIODIC	NOT APPLICABLE
S1. MIX DESIGN			
a. REVIEW CONCRETE BATCH TICKETS AND VERIFY COMPLIANCE WITH APPROVED MIX DESIGN. VERIFY THAT WATER ADDED AT THE SITE DOES NOT EXCEED THAT ALLOWED BY THE MIX DESIGN.	---	X	---
S2. REINFORCEMENT INSTALLATION			
a. INSPECT SIZE, SPACING, COVER, POSITIONING AND GRADE OF REINFORCING STEEL. VERIFY THAT REINFORCING BARS ARE FREE OF FORM OIL OR OTHER DELETERIOUS MATERIALS. INSPECT BAR LAPS AND MECHANICAL SPLICES. VERIFY THAT BARS ARE ADEQUATELY TIED AND SUPPORTED ON CHAIRS OR BOLSTERS.	---	X	---
S3. POST-TENSIONING OPERATIONS			
a. INSPECT PLACEMENT, STRESSING, GROUTING AND PROTECTION OF POST-TENSIONING TENDONS. VERIFY THAT TENDONS ARE CORRECTLY POSITIONED, SUPPORTED, TIED AND WRAPPED. RECORD TENDON ELONGATIONS.	---	---	X
S4. WELDING OF REINFORCING			
a. VISUALLY INSPECT ALL REINFORCING STEEL WELDS. INSPECT PREHEATING OF STEEL WHEN REQUIRED.	---	---	X
S5. CONCRETE PLACEMENT			
a. VERIFY THAT CONCRETE CONVEYANCE AND DEPOSITING AVOIDS SEGREGATION OR CONTAMINATION. VERIFY THAT CONCRETE IS PROPERLY CONSOLIDATED.	---	X	---
S6. SAMPLING AND TESTING OF CONCRETE			
a. TEST CONCRETE COMPRESSIVE STRENGTH (ASTM C31 & C39), SLUMP (ASTM C143), AIR-CONTENT (ASTM C231 OR C173) AND TEMPERATURE (ASTM C1064)	---	---	---

IBC 2009 - TABLE 1704.7 REQUIRED VERIFICATION AND INSPECTION OF SOILS

VERIFICATION AND INSPECTION	CONTINUOUS DURING TASK LISTED	PERIODICALLY DURING TASK LISTED	NOT APPLICABLE
1. VERIFY MATERIALS BELOW SHALLOW FOUNDATIONS ARE ADEQUATE TO ACHIEVE THE DESIGN BEARING CAPACITY.	---	X	---
2. VERIFY EXCAVATIONS ARE EXTENDED TO PROPER DEPTH AND HAVE REACHED PROPER MATERIAL.	---	X	---
3. PERFORM CLASSIFICATION AND TESTING OF COMPACTED FILL MATERIALS.	---	X	---
4. VERIFY USE OF PROPER MATERIALS, DENSITIES AND LIFT THICKNESSES DURING PLACEMENT AND COMPACTION OF COMPACTED FILL.	X	---	---
5. PRIOR TO PLACEMENT OF COMPACTED FILL, OBSERVE SUBGRADE AND VERIFY THAT SITE HAS BEEN PREPARED PROPERLY.	---	X	---

SUPPLEMENTAL INSPECTION REQUIRED OF SOILS AND FOUNDATIONS

VERIFICATION AND INSPECTION	CONTINUOUS DURING TASK LISTED	PERIODICALLY DURING TASK LISTED	NOT APPLICABLE
S1. SHALLOW FOUNDATIONS			
a. INSPECT REMOVAL OF UNSUITABLE MATERIAL AND PREPARATION OF SUBGRAGE PRIOR TO PLACEMENT OF CONTROLLED FILL.	---	---	---
S2. CONTROLLED STRUCTURAL FILL			
a. PERFORM SIEVE TESTS (ASTM D422 & D1140) AND MODIFIED PROCTOR TESTS (ASTM D1557) OF EACH SOURCE OF FILL MATERIAL.	---	---	---
b. TEST DENSITY OF EACH LIFT OF FILL BY NUCLEAR METHODS (ASTM D2922).	---	---	---
c. VERIFY EXTENT AND SLOP OF FILL PLACEMENT.	---	---	---

QUINN EVANS ARCHITECTS

2121 WARD PLACE, NW
FOURTH FLOOR
WASHINGTON, DC 20007

v 202 298 6700
f 202 298 6666

WWW.QUINNEVANS.COM

FERRY FARM PHASE 1 IMPROVEMENTS M&O BUILDING

268 Kings Hwy, Fredericksburg, VA 22405

QEA # #31402900

SPECIAL INSOPECTION NOTES

BUILDING PERMIT SUBMISSION
06/30/15

REVISIONS

NO.	DESCRIPTION	DATE

S-005

6/24/2015 1:00:04 PM F:\Proj\37061-01\Drawings\Current\Revit 2014\GWF M&O Building-13061-01.rvt

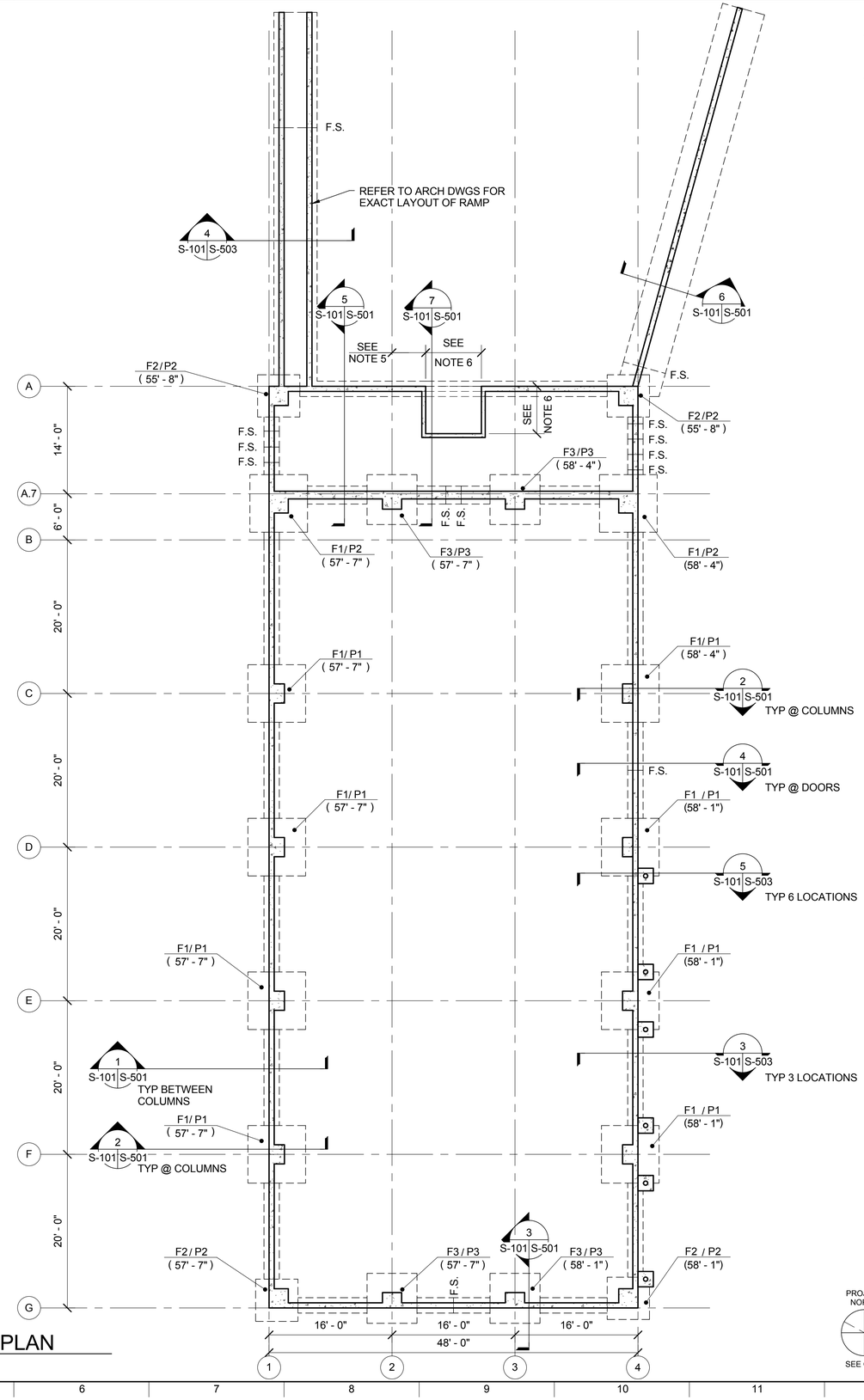

FOUNDATION PLAN

1 S-101 S-101 SCALE 1/8" = 1'-0"

NOTES:

1. "Fx" DENOTES FOOTING IDENTIFICATION MARK. SEE 1/S-502.
2. "Px" DENOTES PIER IDENTIFICATION MARK. SEE 1/S-502.
3. "(XX' - X") DENOTES TOP OF FOOTING ELEVATION.
4. SEE 1/S-502 FOR FOOTING AND PIER SCHEDULE.
5. SEE ARCHITECTURAL DRAWINGS FOR EXACT LOCATION OF DOCK LEVELER.
6. COORDINATE EXACT SIZE OF DOCK LEVELER WITH ACTUAL SIZE PROVIDED.
7. THE FOUNDATION AND SLAB ON GRADE WERE DESIGNED AND DETAILED BASED ON PRELIMINARY FRAME CONFIGURATIONS AND LOADS AND WILL BE REVIEWED AND MAY BE MODIFIED WHEN THE APPROVED FINAL PRE- PRE-ENGINEERED METAL BUILDING CALCULATIONS AND DRAWINGS/SHOP DRAWINGS ARE SUBMITTED. SIGNED AND SEALED DRAWINGS/SHOP DRAWINGS AND CALCULATIONS FOR THE PRE-ENGINEERED METAL BUILDING ARE REQUIRED TO BE SUBMITTED TO THE STRUCTURAL ENGINEER OF RECORD FOR REVIEW, APPROVAL, AND INCORPORATION INTO THE CONTRACT DOCUMENTS PRIOR TO FABRICATION. SEE THE PROJECT SPECIFICATIONS FOR ADDITIONAL REQUIREMENTS.

PROJECT NORTH

SEE G-002

GRAPHIC SCALE

0 4' 8' 16'

1/8" = 1'-0"

CAUTION: IF THIS DRAWING IS A REDUCTION, GRAPHIC SCALES MUST BE USED

QUINN EVANS ARCHITECTS

2121 WARD PLACE, NW
FOURTH FLOOR
WASHINGTON, DC 20007

v 202 298 6700
f 202 298 6666

WWW.QUINNEVANS.COM

FERRY FARM PHASE 1 IMPROVEMENTS M&O BUILDING

268 Kings Hwy, Fredericksburg, VA 22405

QEA # #31402900

FOUNDATION PLAN

BUILDING PERMIT SUBMISSION
06/30/15

REVISIONS

NO.	DESCRIPTION	DATE

S-101

6/24/2015 1:00:05 PM F:\Proj\13061.01\Drawings\Current\Revit 2014\GWF M&O Building-13061.rvt

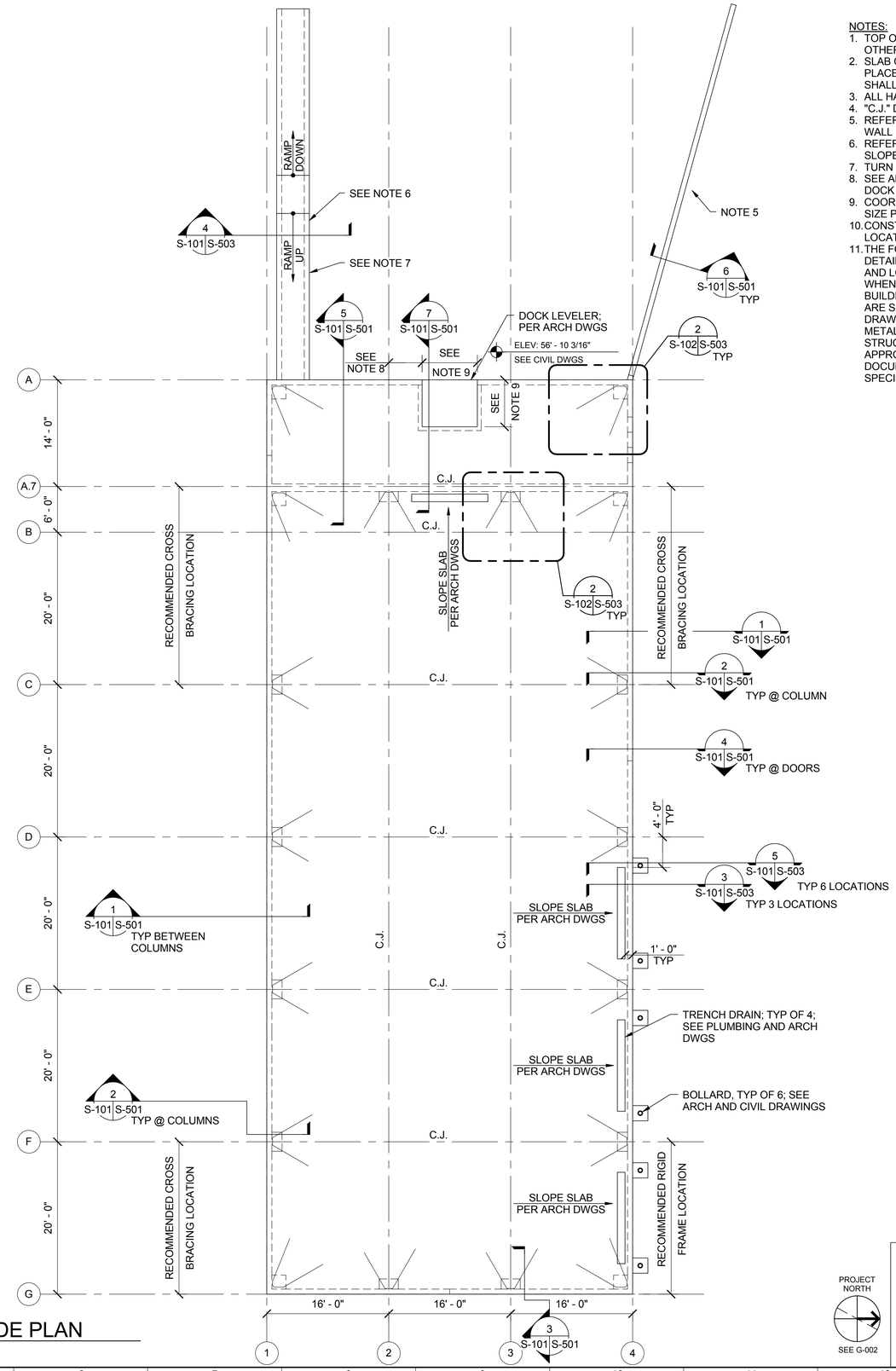

NOTES:

1. TOP OF SLAB ELEVATION = 60' - 10 3/16" (60.85') UNLESS OTHERWISE NOTED
2. SLAB ON GRADE SHALL BE 6" THICK WITH #4 BARS AT 12" O.C. PLACED IN THE MIDDLE THIRD OF SLAB. SUBGRADE FOR SLAB SHALL BE 4" OF GRANULAR FILL.
3. ALL HAIRPIN BARS ARE #5 DEFORMED BARS. SEE 2/S-503.
4. "C.J." DENOTES CONTROL JOINT. SEE 3/S-502.
5. REFER TO ARCHITECT AND CIVIL DRAWINGS FOR RETAINING WALL LENGTH AND HEIGHT.
6. REFER TO ARCHITECT AND CIVIL DRAWINGS FOR RAMP SLOPE, LAYOUT, AND EXTENT.
7. TURN DOWN SLAB OVER WALL.
8. SEE ARCHITECTURAL DRAWINGS FOR EXACT LOCATION OF DOCK LEVELER.
9. COORDINATE EXACT SIZE OF DOCK LEVELER WITH ACTUAL SIZE PROVIDED.
10. CONSTRUCTION JOINTS IN SLAB ON GRADE MAY ONLY BE LOCATED AT COLUMN LINES A.7, C, D, E, AND F.
11. THE FOUNDATION AND SLAB ON GRADE WERE DESIGNED AND DETAILED BASED ON PRELIMINARY FRAME CONFIGURATIONS AND LOADS AND WILL BE REVIEWED AND MAY BE MODIFIED WHEN THE APPROVED FINAL PRE- PRE-ENGINEERED METAL BUILDING CALCULATIONS AND DRAWINGS/SHOP DRAWINGS ARE SUBMITTED. SIGNED AND SEALED DRAWINGS/SHOP DRAWINGS AND CALCULATIONS FOR THE PRE-ENGINEERED METAL BUILDING ARE REQUIRED TO BE SUBMITTED TO THE STRUCTURAL ENGINEER OF RECORD FOR REVIEW, APPROVAL, AND INCORPORATION INTO THE CONTRACT DOCUMENTS PRIOR TO FABRICATION. SEE THE PROJECT SPECIFICATIONS FOR ADDITIONAL REQUIREMENTS

1 S-102 S-102 SLAB ON GRADE PLAN
SCALE 1/8" = 1'-0"

GRAPHIC SCALE
0 4' 8' 16'
1/8" = 1'-0"

CAUTION: IF THIS DRAWING IS A REDUCTION, GRAPHIC SCALES MUST BE USED

QUINN EVANS ARCHITECTS
2121 WARD PLACE, NW
FOURTH FLOOR
WASHINGTON, DC 20007
v 202 298 6700
f 202 298 6666
WWW.QUINNEVANS.COM

FERRY FARM PHASE 1 IMPROVEMENTS M&O BUILDING

268 Kings Hwy, Fredericksburg, VA 22405

QEA # #31402900

SLAB ON GRADE PLAN

BUILDING PERMIT SUBMISSION
06/30/15

REVISIONS

NO.	DESCRIPTION	DATE

S-102

6/24/2015 1:00:06 PM F:\Proj\13061-01\Drawings\Current\Revit 2014\DWF M&O Building-13061-01.rvt

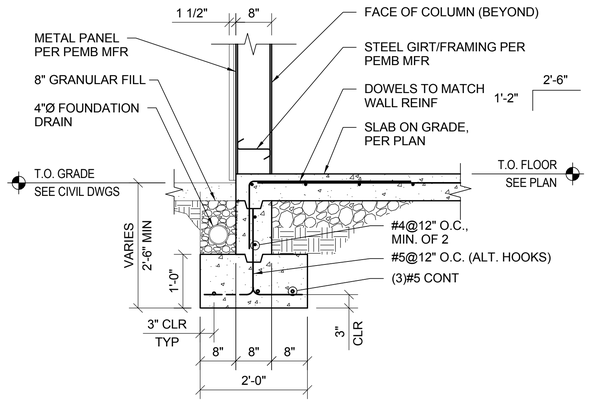

1 S-101 S-501 SECTION BETWEEN COLUMNS
SCALE 3/4" = 1'-0"

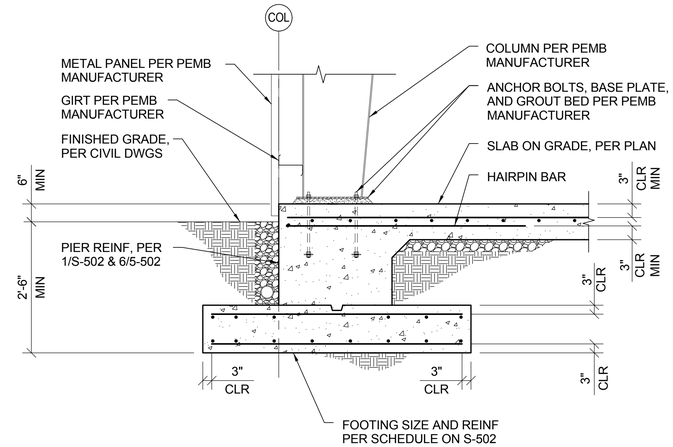

2 S-101 S-501 SECTION AT INTERIOR COLUMN AT PANEL FACADE
SCALE 1/2" = 1'-0"

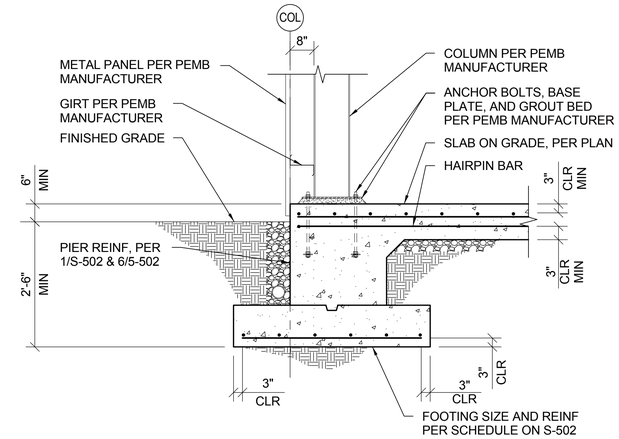

3 S-101 S-501 SECTION AT END COLUMN
SCALE 1/2" = 1'-0"

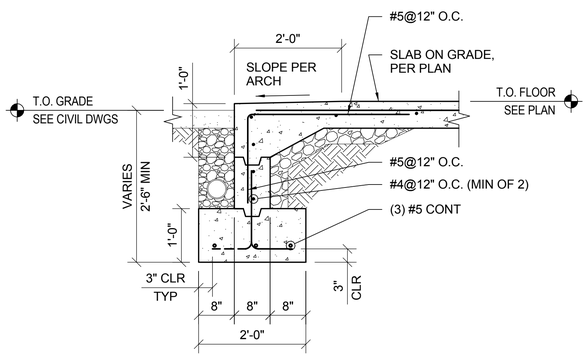

4 S-501 S-501 SECTION AT DOOR
SCALE 3/4" = 1'-0"

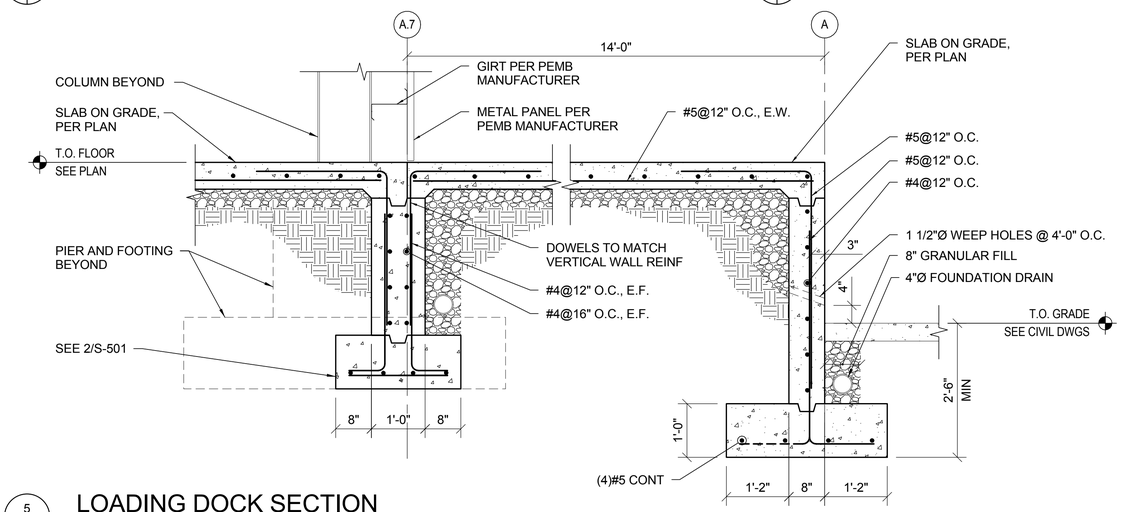

5 S-101 S-501 LOADING DOCK SECTION
SCALE 3/4" = 1'-0"

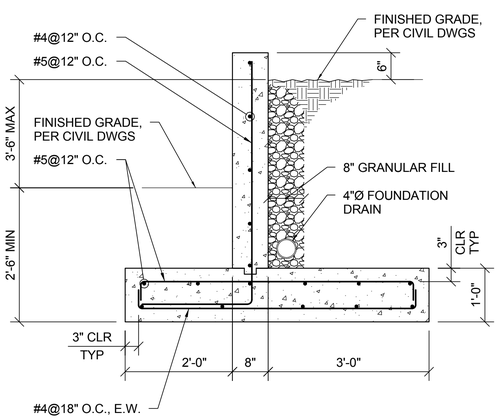

6 S-101 S-501 SITE RETAINING WALL SECTION
SCALE 3/4" = 1'-0"

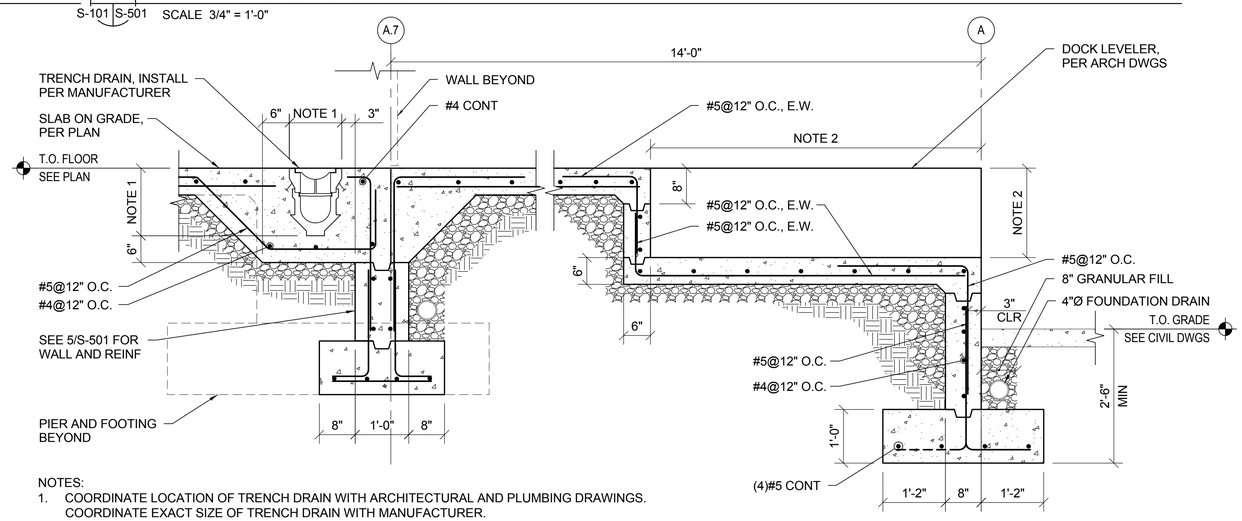

NOTES:
1. COORDINATE LOCATION OF TRENCH DRAIN WITH ARCHITECTURAL AND PLUMBING DRAWINGS. COORDINATE EXACT SIZE OF TRENCH DRAIN WITH MANUFACTURER.
2. COORDINATE DIMENSION WITH ACTUAL DOCK LEVELER PROVIDED.

7 S-101 S-501 DOCK LEVELER SECTION
SCALE 3/4" = 1'-0"

GRAPHIC SCALE

0 2' 4' 6'
3/8" = 1'-0"

0 1' 2' 4'
1/2" = 1'-0"

0 1' 2' 3'
3/4" = 1'-0"

CAUTION: IF THIS DRAWING IS A REDUCTION, GRAPHIC SCALES MUST BE USED

QUINN EVANS ARCHITECTS

2121 WARD PLACE, NW
FOURTH FLOOR
WASHINGTON, DC 20007

v 202 298 6700
f 202 298 6666

WWW.QUINNEVANS.COM

FERRY FARM PHASE 1 IMPROVEMENTS M&O BUILDING

268 Kings Hwy, Fredericksburg, VA 22405

QEA # #31402900

SECTIONS & DETAILS

BUILDING PERMIT SUBMISSION
06/30/15

REVISIONS

NO.	DESCRIPTION	DATE

S-501

F:\Proj\13060101\Drawings\Current\Revit 2014\GWF M&O Building-13060101.rvt
6/24/2015 1:00:07 PM

FOOTING SCHEDULE		
MARK	SIZE	REINFORCING
F1	7'-6"x7'-6"x1'-4"	(8)#5 E.W., T&B
F2	5'-6"x5'-6"x1'-4"	(6)#5 E.W., T&B
F3	6'-6"x6'-6"x1'-4"	(6)#5 E.W., T&B

PIER SCHEDULE			
Mark	SIZE (WxL)	VERT REINF	NOTES
P1	30"x24"	(10)#6	SEE SECTION 6/S-502
P2	30"x30"	(12)#6	SEE SECTION 6/S-502
P3	24"x30"	(12)#6	SEE SECTION 6/S-502

NOTE:
1. SEE 5/S-502 FOR PIER PLAN DETAILS.

W = PLAN NORTH SOUTH DIRECTION
L = PLAN EAST WEST DIRECTION

1 S-502 S-502 FOOTING SCHEDULE
SCALE NOT TO SCALE

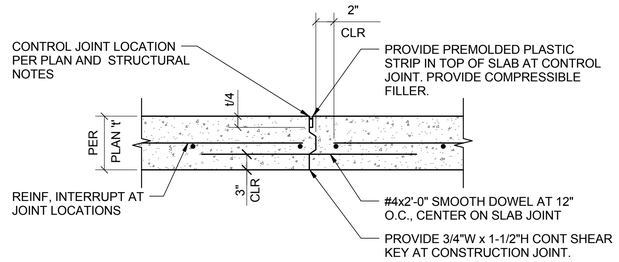

2 S-502 S-502 TYPICAL SLAB-ON-GRADE CONSTRUCTION JOINT DETAIL
SCALE 1 1/2" = 1'-0"

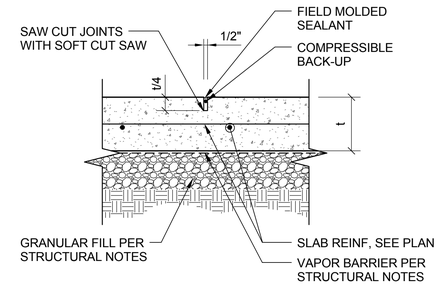

3 S-502 S-502 TYPICAL CONTROL JOINT
SCALE 1 1/2" = 1'-0"

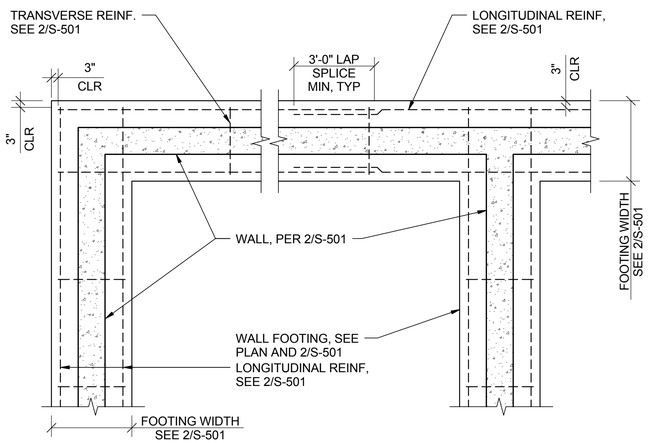

WALL FOOTING CORNER DETAIL

WALL FOOTING INTERSECTION DETAIL

4 S-502 S-502 TYPICAL WALL FOOTING REINFORCING DETAIL
SCALE 3/8" = 1'-0"

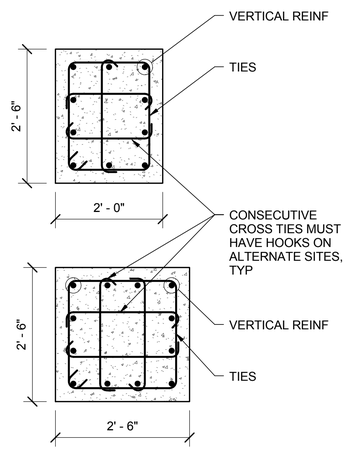

5 S-502 S-502 PIER PLAN DETAILS
SCALE 3/4" = 1'-0"

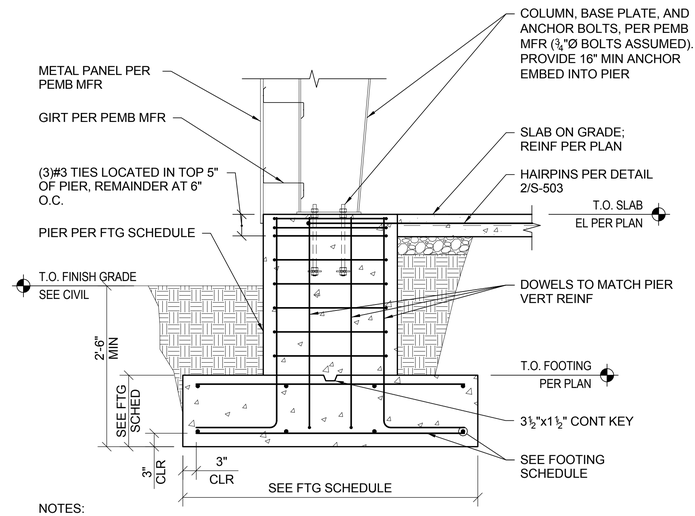

NOTES:
1. COLUMNS SHALL BE CENTERED ON PIERS AND PIERS SHALL BE CENTERED ON FOOTINGS UNLESS OTHERWISE SHOWN.

6 S-502 S-502 TYPICAL COLUMN FOOTING
SCALE 3/4" = 1'-0"

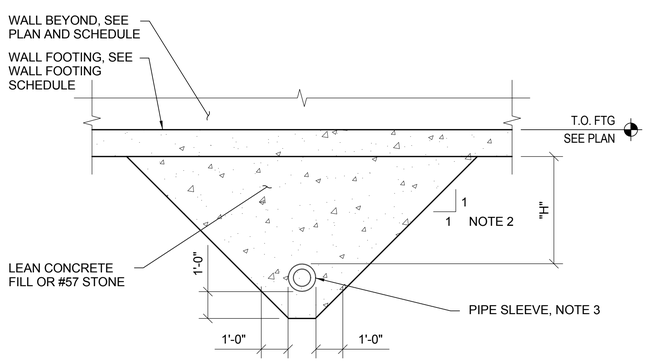

FOR H > 4'

NOTE:
1. SEE PLUMBING, MECHANICAL, OR ELECTRICAL DRAWINGS FOR UTILITY LOCATIONS AND ELEVATIONS.
2. COORDINATE SLOPE WITH OSHA REGULATIONS AND GEOTECH REPORT.
3. THE INNER DIAMETER OF THE PIPE SLEEVE SHALL BE A MINIMUM OF 2" GREATER THAN THE OUTER DIAMETER OF THE UTILITY, ALL AROUND.

7 S-502 S-502 TYPICAL DETAIL - SITE UTILITY OVER 4'
SCALE NOT TO SCALE

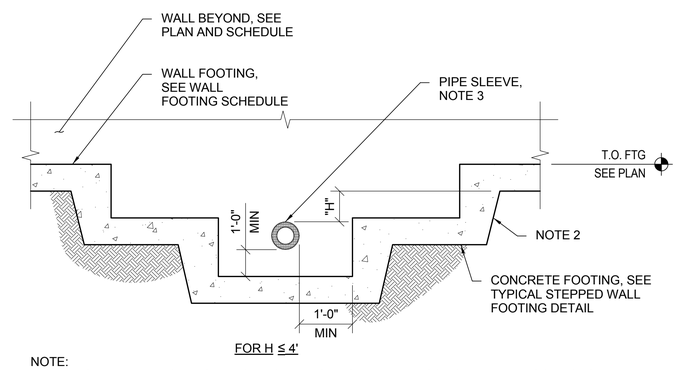

FOR H ≤ 4'

NOTE:
1. SEE PLUMBING, MECHANICAL, OR ELECTRICAL DRAWINGS FOR UTILITY LOCATIONS AND ELEVATIONS.
2. COORDINATE SLOPE WITH OSHA REGULATIONS AND GEOTECH REPORT.
3. THE INNER DIAMETER OF THE PIPE SLEEVE SHALL BE A MINIMUM OF 2" GREATER THAN THE OUTER DIAMETER OF THE UTILITY, ALL AROUND.

8 S-502 S-502 TYPICAL DETAIL - SITE UTILITY UNDER 4' DEEP
SCALE NOT TO SCALE

GRAPHIC SCALE

0 2' 4' 6'
3/8" = 1'-0"

0 1' 2' 3'
3/4" = 1'-0"

0 1/2' 1' 2'
1" = 1'-0"

0 1/2' 1' 1 1/2'
1-1/2" = 1'-0"

CAUTION: IF THIS DRAWING IS A REDUCTION, GRAPHIC SCALES MUST BE USED

QUINN EVANS ARCHITECTS

2121 WARD PLACE, NW
FOURTH FLOOR
WASHINGTON, DC 20007

v 202 298 6700
f 202 298 6666

WWW.QUINNEVANS.COM

FERRY FARM PHASE 1 IMPROVEMENTS M&O BUILDING

268 Kings Hwy, Fredericksburg, VA 22405

QEA # #31402900

SCHEDULES, SECTIONS, & DETAILS

BUILDING PERMIT SUBMISSION
06/30/15

REVISIONS

NO.	DESCRIPTION	DATE

S-502

F:\Proj\13061-01\Drawings\Current\Revit 2014\GWF M&O Building-13061-01.rvt
6/24/2015 1:00:08 PM

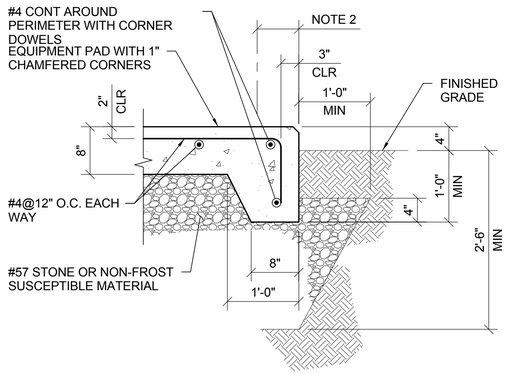

EXTERIOR PAD

NOTES:
1. COORDINATE EQUIPMENT PAD SIZE AND LOCATION PER ARCH AND MEP DRAWINGS, AND ACTUAL UNIT SELECTED.
2. PROVIDE A MINIMUM 6" CLEAR DISTANCE BETWEEN EQUIPMENT AND EDGE OF PAD.

1 TYPICAL EQUIPMENT PAD DETAILS

S-503 | S-503 SCALE 1" = 1'-0"

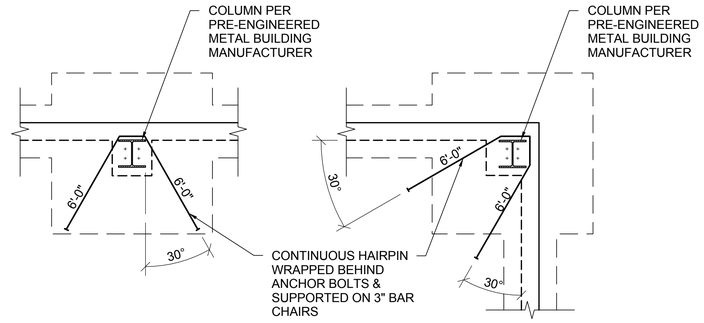

INTERIOR OR END COLUMN

CORNER COLUMN

NOTE:
1. PROVIDE HAIRPINS AT ALL PRE-ENGINEERED METAL BUILDING COLUMN LOCATIONS.
2. ALL HAIRPIN BARS ARE #5 DEFORMED REINFORCING BARS.

2 HAIRPIN PLAN DETAILS

S-102 | S-503 SCALE 3/8" = 1'-0"

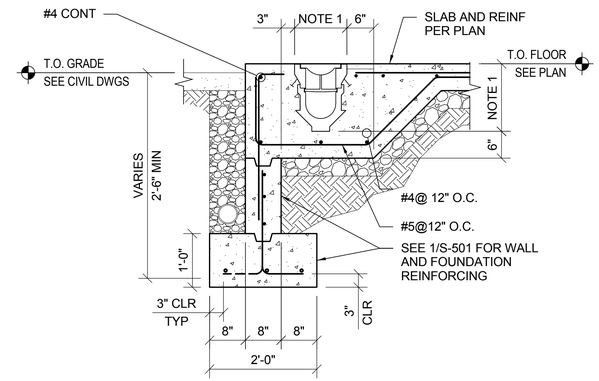

NOTES:
1. COORDINATE LOCATION OF TRENCH DRAIN WITH ARCHITECTURAL AND PLUMBING DRAWINGS. COORDINATE EXACT SIZE OF TRENCH DRAIN WITH MANUFACTURER.

3 TYPICAL TRENCH DRAIN DETAIL

S-101 | S-503 SCALE 3/4" = 1'-0"

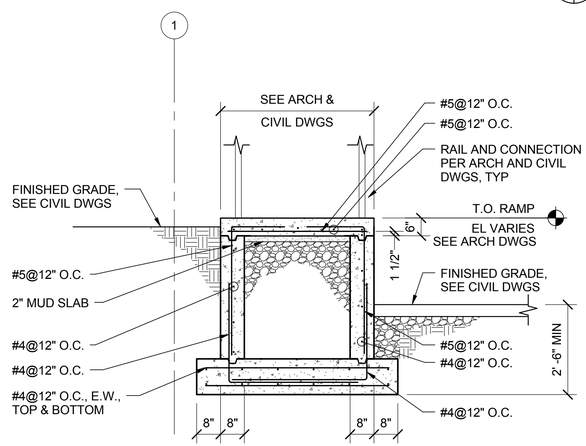

4 TYPICAL SECTION TRHOUGH RAMP

S-101 | S-503 SCALE 1/2" = 1'-0"

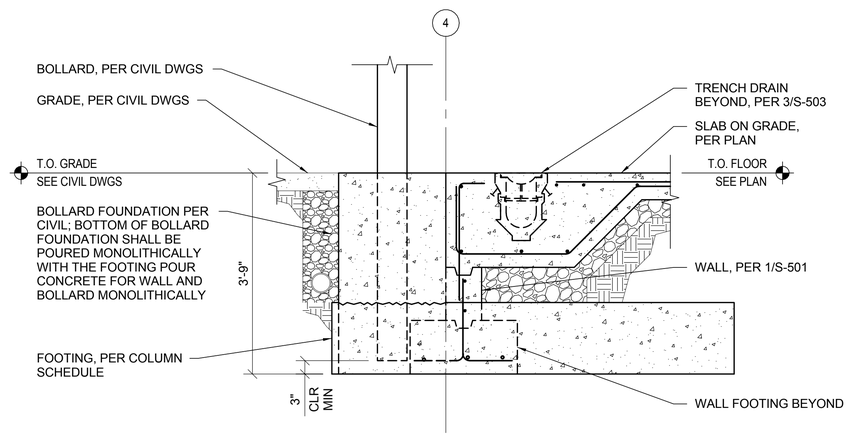

5 BOLLARD DETAIL

S-101 | S-503 SCALE 3/4" = 1'-0"

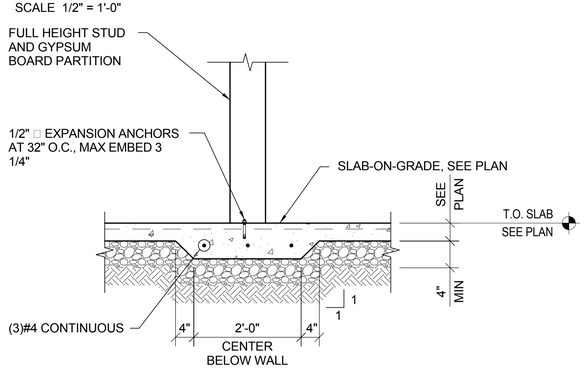

NOTE: SEE ARCHITECTURAL DRAWINGS FOR LOCATIONS OF FULL HEIGHT PARTITIONS.

6 THICKENED SLAB DETAIL AT FULL HEIGHT PARTITION WALL

S-503 | S-503 SCALE 3/4" = 1'-0"

GRAPHIC SCALE

0 2' 4' 6'
3/8" = 1'-0"

0 1' 2' 4'
1/2" = 1'-0"

0 1' 2' 3'
3/4" = 1'-0"

0 1/2' 1' 2'
1" = 1'-0"

CAUTION: IF THIS DRAWING IS A REDUCTION, GRAPHIC SCALES MUST BE USED

QUINN EVANS ARCHITECTS

2121 WARD PLACE, NW
FOURTH FLOOR
WASHINGTON, DC 20007

v 202 298 6700
f 202 298 6666

WWW.QUINNEVANS.COM

FERRY FARM PHASE 1 IMPROVEMENTS M&O BUILDING

268 Kings Hwy, Fredericksburg, VA 22405

QEA # #31402900

SECTIONS AND DETAILS

BUILDING PERMIT SUBMISSION
06/30/15

REVISIONS

NO.	DESCRIPTION	DATE

S-503

6/24/2015 1:00:08 PM F:\Proj\13001-010\Drawings\Current\Revit 2014\QWF M&O Building-13061011.rvt

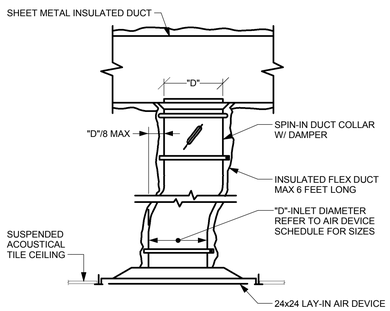

NOTE:

1. RECTANGULAR DUCT SHOWN; ROUND DUCT SIMILAR, WITH VOLUME DAMPER AFTER LOW LOSS TEE OFF SUPPLY MAIN.

1 / M-300 AIR DEVICE (TYPE CD)
NOT TO SCALE

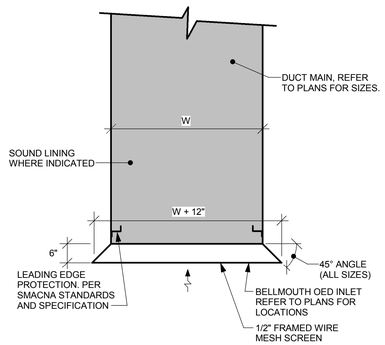

NOTE:

1. DRAWINGS INDICATE OPEN ENDED DUCT WITH WxH DIMENSIONS. OVERALL DIMENSIONS OF BELLMOUTH ARE W + 12" x H + 12".

2 / M-300 BELLMOUTH DUCT INLET
NOT TO SCALE

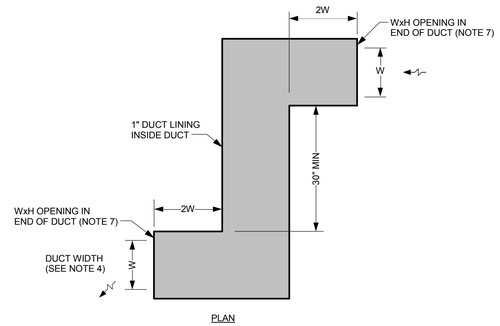

NOTES:

1. USE MINIMUM 22 GAUGE OR SMACNA GAUGE (WHICHEVER IS GREATER) SHEETMETAL FOR CONSTRUCTION AND LINE WITH 1" THICK SOUND LINING.
2. SUSPEND RETURN AIR/TRANSFER DUCT ELBOWS FROM ROOF STRUCTURE ABOVE.
3. REFER TO PLANS FOR LOCATIONS OF TRANSFER DUCTS.

3 / M-300 RETURN AIR/TRANSFER DUCT WITH ELBOWS
NOT TO SCALE

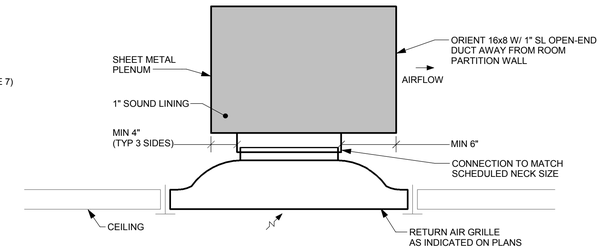

4 / M-300 RETURN AIR DEVICE IN PLENUM CEILINGS (TYPE CR)
NOT TO SCALE

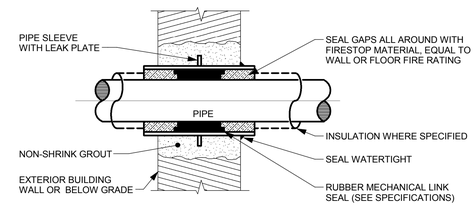

5 / M-300 EXTERIOR CONCRETE WALL PENETRATION
NOT TO SCALE

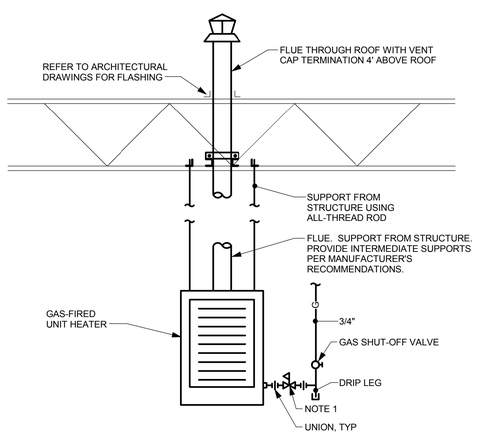

NOTE:

1. FIELD INSTALLED PRESSURE REGULATOR FURNISHED BY UNIT HEATER MANUFACTURER WHERE REQUIRED.

6 / M-300 GAS-FIRED UNIT HEATER
NOT TO SCALE

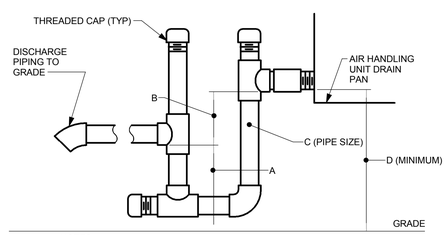

NOTES:

1. FOR DRAW THRU TRAPS: "B" = FAN INLET PRESSURE PLUS 1 INCH, "A" = B/2
2. PROVIDE PIPING INSULATION - REFER TO SPECIFICATIONS.

PIPE SCHEDULE				
UNIT #	A	B	C	D
AHU-1	2	4	1 1/4	12

7 / M-300 OUTDOOR COOLING COIL CONDENSATE DRAIN
1/8" = 1'-0"

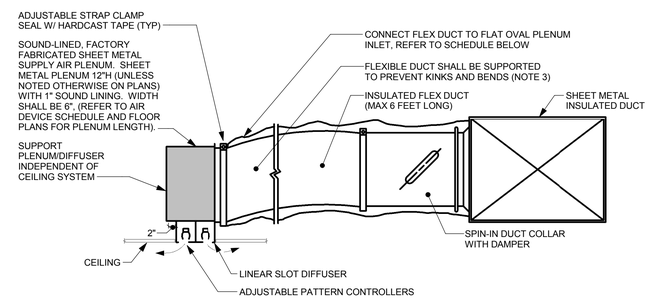

NOTES:

1. RECTANGULAR BRANCH DUCT SHOWN; ROUND DUCT SIMILAR, WITH VOLUME DAMPER AFTER LOW LOSS TEE OFF SUPPLY BRANCH.
2. WHERE INDICATED ON PLANS PROVIDE RECTANGULAR OR ROUND DUCT RUNOUTS OF SIZE INDICATED WITH VD.

FLAT OVAL INLET SCHEDULE		
	A	B
FLEX DUCT	A	B
6"Ø	6 1/4"	5 1/4"
8"Ø	9 3/8"	5 1/4"
10"Ø	12 1/2"	5 1/4"
12"Ø	14 1/8"	7 1/8"

8 / M-300 LINEAR SLOT AIR DEVICE (TYPE PSD)
NOT TO SCALE

QUINN EVANS ARCHITECTS

2121 WARD PLACE, NW
FOURTH FLOOR
WASHINGTON, DC 20007

v 202 298 6700
f 202 298 6666

WWW.QUINNEVANS.COM

Mueller

Mueller Associates, Inc.
Consulting Engineers
1401 S. Edgewood Street
Baltimore, Maryland 21227
410.646.4500 tel > 410.646.4738 fax
www.muellerassoc.com

FERRY FARM PHASE 1 IMPROVEMENTS M&O BUILDING

268 Kings Hwy, Fredericksburg, VA 22405

QEA # 31402900

MECHANICAL DETAILS

COMMONWEALTH OF VIRGINIA
DANIEL CARMINE
Lic. No. 040419
PROFESSIONAL ENGINEER
6/30/15

BUILDING PERMIT SUBMISSION
06/30/15

REVISIONS

NO.	DESCRIPTION	DATE

M-300

6/24/2015 5:26:34 PM C:\Users\test\Documents\Ferry Farm M&O Building MEP Central_kas.rvt

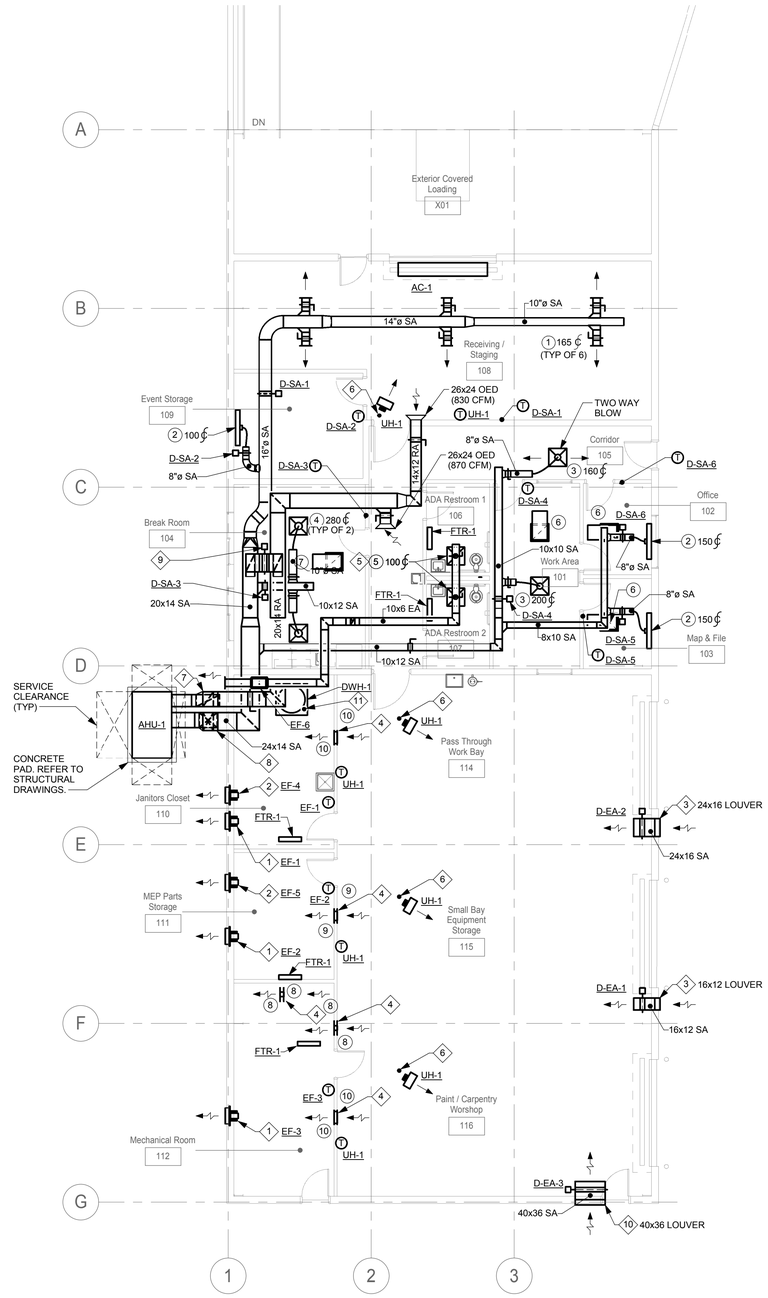

1 M-100 FIRST FLOOR PLAN - HVAC
1/8" = 1'-0"

GENERAL NOTES:

1 ALL RECTANGULAR DUCTWORK, FITTINGS, JOINTS, SUPPORTS, VOLUME DAMPERS, ACCESS DOORS, ETC., SHALL CONFORM WITH REQUIREMENTS AND DETAILS IN THE DUCT MANUAL, "HVAC DUCT CONSTRUCTION STANDARDS, METAL AND FLEXIBLE, 3RD EDITION - 2005," PREPARED BY SMACNA. INSTALL HANGERS, SUPPORTS, AND ATTACHMENTS GENERALLY IN CONFORMANCE WITH SMACNA STANDARDS.

2 ALL LOW PRESSURE DUCTWORK SHALL BE RATED 2-INCH W.G., AND SEALED IN ACCORDANCE WITH "SEAL CLASS C." DUCTWORK SHALL BE CONSTRUCTED OF PRIME QUALITY G90 GALVANIZED STEEL. REINFORCE ALL DUCTS TO PREVENT BUCKLING, BREATHING, VIBRATIONS, OR UNNECESSARY NOISE. SUCH REINFORCING SHALL BE AS RECOMMENDED IN DUCT MANUAL, PLUS ANY ADDITIONAL REINFORCING AS REQUIRED TO MEET JOB CONDITIONS. ELBOWS SHALL BE DOUBLE RADIUS VANES ONLY WITH BLADE ALIGNMENT ASSEMBLY, EXCEPT ELBOWS ON RETURN AIR CEILING DEVICES SHALL BE UNVANED.

3 IT SHALL BE THE SOLE RESPONSIBILITY OF THE CONTRACTOR TO PROVIDE AN ADEQUATE PIPE SUSPENSION SYSTEM IN ACCORDANCE WITH RECOGNIZED ENGINEERING PRACTICES, USING STANDARD, COMMERCIALLY ACCEPTED PIPE HANGERS AND SUSPENSION EQUIPMENT. THE DESIGN OF ALL HANGERS AND SUPPORTS SHALL BE IN ACCORDANCE WITH THE PROVISION OF CURRENT ISSUE OF MSS-SP-58 AND SP-69 DOCUMENT DEVELOPED AS A STANDARD BY THE MANUFACTURE'S STANDARDIZATION SOCIETY.

◇ SPECIAL NOTES:

1 MOUNT FAN APPROXIMATELY 7'-6" AFF.

2 MOUNT FAN APPROXIMATELY 13'-0" AFF.

3 BOTTOM OF LOUVER APPROXIMATELY 7'-0" AFF. REFER TO ARCHITECTURAL PLANS FOR SIZE OF LOUVER.

4 BOTTOM OF WALL GRILLE LOCATED APPROXIMATELY 7'-0" AFF.

5 VOLUME DAMPER IN VERTICAL.

6 4"Ø FLUE UP THRU ROOF. REFER TO DETAIL 6 / M-300. REFER TO ARCHITECTURAL PLANS FOR FLASHING AT ROOF PENETRATION.

7 20x14 RA TRANSITION TO 16x32 IN VERTICAL.

8 24x14 SA TRANSITION TO 20x24 IN VERTICAL.

9 CONTROL DAMPER D-BP-1 IN 24x12 BYPASS DUCT.

10 BOTTOM OF LOUVER APPROXIMATELY 5'-0" AFF. REFER TO ARCHITECTURAL PLANS FOR SIZE OF LOUVER.

11 4"Ø FLUE DN TO DOMESTIC WATER HEATER & UP THRU ROOF. REFER TO ARCHITECTURAL PLANS FOR FLASHING AT ROOF PENETRATION.

PROJECT NORTH

IF DRAWING IS REDUCED, USE GRAPHIC SCALE
5' 0' 5' 10'
1/8" = 1'-0"

QUINN EVANS ARCHITECTS

2121 WARD PLACE, NW
FOURTH FLOOR
WASHINGTON, DC 20007

v 202 298 6700
f 202 298 6666

WWW.QUINNEVANS.COM

Mueller

Mueller Associates, Inc.
Consulting Engineers
1401 S. Edgewood Street
Baltimore, Maryland 21227
410.646.4500 tel > 410.646.4738 fax
www.muellerassoc.com

FERRY FARM PHASE 1 IMPROVEMENTS M&O BUILDING

268 Kings Hwy, Fredericksburg, VA 22405

QEA # 31402900

FIRST FLOOR - HVAC

COMMONWEALTH OF VIRGINIA
DANIEL CARMINE
Lic. No. 044419
PROFESSIONAL ENGINEER
6/30/15

BUILDING PERMIT SUBMISSION
06/30/15

REVISIONS

NO.	DESCRIPTION	DATE

M-100

6/24/2015 5:26:27 PM C:\Users\ewa\Documents\Ferry Farm M&O Building MEP Central_ewa.rvt

ABBREVIATIONS

ABBREV	ABBREVIATION
ABD	ABANDONED
ABV	ABOVE
A/C	AIR CONDITIONING
AD	ACCESS DOOR
AFF	ABOVE FINISHED FLOOR
AHU	AIR HANDLING UNIT
ALUM	ALUMINUM
APD	AIR PRESSURE DROP
APPROX	APPROXIMATE
ARCH	ARCHITECT, ARCHITECTURAL
ARRG	ARRANGEMENT
AST	ABOVEGROUND STORAGE TANK
ATC	AUTOMATIC TEMPERATURE CONTROL
ATM	ATMOSPHERE
ATR	AIR TEMPERATURE RISE
ATU	AIR TERMINAL UNIT
AVG	AVERAGE
AWT	AVERAGE WATER TEMPERATURE
BWV	BACK WATER VALVE
BHP	BRAKE HORSEPOWER
BLDG	BUILDING
BOP	BOTTOM OF PIPE
BTM	BOTTOM
BTUH	BRITISH THERMAL UNITS PER HOUR
BFP	BACKFLOW PREVENTER
°C	DEGREES CELSIUS
CAV	CONSTANT AIR VOLUME
CC	COOLING COIL
CD	CEILING DIFFUSER
CFM	CUBIC FEET PER MINUTE
CLG	CEILING
CO	CLEANOUT
CO2	CARBON DIOXIDE
COMP	COMPRESSED
CONC	CONCRETE
CONN	CONNECTION, CONNECT
CONT	CONTINUATION
CP	CONDENSATE PUMP
CRAC	COMPUTER ROOM AIR CONDITIONER
CRU	CONDENSATE RETURN UNIT
CU FT	CUBIC FEET
CUH	CABINET UNIT HEATER
CX	CONNECT TO EXISTING
CW	DOMESTIC COLD WATER PIPE
D	DRAIN OR DEPTH
DB	DRY BULB OR DECIBEL
DBA	DECIBEL (REFERENCE "A" SCALE)
DBL	DOUBLE
DCP	DIGITAL CONTROL PANEL
DDC	DIRECT DIGITAL CONTROL
DESIG	DESIGNATION
DF	DRINKING FOUNTAIN
DFU	DRAINAGE FIXTURE UNITS
DIA	DIAMETER
DIFF	DIFFUSER
DN	DOWN
DW	DOMESTIC WATER
DWG	DRAWING
EA	EXHAUST AIR
EAT	ENTERING AIR TEMPERATURE
EDB	ENTERING DRY BULB
EFF	EFFICIENCY
EG	ETHYLENE GLYCOL
EJ	EXPANSION JOINT
ELEC	ELECTRICAL, ELECTRIC
ELEV	ELEVATION OR ELEVATOR
EMD	END OF MAIN DRIP
ENT	ENTERING
ESP	EXTERNAL STATIC PRESSURE
ETC	ET CETERA
EW	EYE WASH
EWB	ENTERING WET BULB
EWC	ELECTRIC WATER COOLER
EWT	ENTERING WATER TEMPERATURE
EX	EXISTING
EXP	EXPOSED
°F	DEGREES FAHRENHEIT
F&T	FLOAT & THERMOSTATIC TRAP
FCU	FAN COIL UNIT
FCVA	FLOOR CONTROL VALVE ASSEMBLY
FD	FLOOR DRAIN
FDC	FIRE DEPARTMENT CONNECTION
FF	FINISHED FLOOR
FHC	FIRE HOSE CABINET
FHV	FIRE HOSE VALVE
FL	FLOOR
FND	FOUNDATION DRAINAGE
FOB	FLAT ON BOTTOM
FOT	FLAT ON TOP
FPI	FINS PER INCH
FPM	FEET PER MINUTE
FPS	FEET PER SECOND
FS	FLOOR SINK
FT HD	FEET OF HEAD PRESSURE
FTR	FINNED TUBE RADIATION
GA	GAGE
GAL	GALLON
GALV	GALVANIZED
GPH	GALLONS PER HOUR
GPM	GALLONS PER MINUTE
H	HEIGHT
HED	HOSE END DRAIN
HORIZ	HORIZONTAL
HP	HORSEPOWER
H.P.	HIGH PRESSURE
HVAC	HEATING, VENTILATING & AIR CONDITIONING
HW	DOMESTIC HOT WATER PIPE
HWR	DOMESTIC HOT WATER RECIRCULATING
HZ	PIPE HERTZ
IB	INVERTED BUCKET TRAP
I.L.	INTERMEDIATE LENDING
IN	INCH OR INCHES
INV	INVERT ELEVATION
KVA	KILOVOLT AMPERES
KW	KILOWATT
L	LENGTH
LAT	LEAVING AIR TEMPERATURE
LB(S)	POUND(S)
LDB	LEAVING DRY BULB
LF	LINEAR FEET
L.P.	LOW PRESSURE
LVG	LEAVING
LWB	LEAVING WET BULB
LWT	LEAVING WATER TEMPERATURE
MAX	MAXIMUM
MECH	MECHANICAL
MBH	THOUSAND BTU'S PER HOUR
MFR	MANUFACTURER
MIN	MINIMUM
MO	MOTOR OPERATOR
MS	MOP SINK
MTD	MOUNTED
NAT	NATURAL
NC	NOISE CRITERIA
N.C.	NORMALLY CLOSED
NIC	NOT IN CONTRACT
N.O.	NORMALLY OPEN
NO.	NUMBER
OA	OUTDOOR AIR
OC	ON CENTER
OED	OPEN END DUCT
OFD	OVERFLOW DRAIN
OS&Y	OUTSIDE SCREW AND YOKE
PD	PRESSURE DROP
PF	POWER FACTOR
PG	PROPYLENE GLYCOL
PH	PHASE
PHC	PREHEAT COIL
PLBG	PLUMBING
PPH	POUNDS PER HOUR (STEAM)
PPM	PARTS PER MILLION
PRESS.	PRESSURE
PRV	PRESSURE REDUCING VALVE
PSI(G)	POUNDS PER SQUARE INCH (GAGE)
PUH	PROPELLER UNIT HEATER
PVC	POLYVINYL CHLORIDE
QTY	QUANTITY
R	RADIUS
RA	RETURN AIR
RAD	RADIATED
RD	ROOF DRAIN
REQ'D	REQUIRED
RH	RELATIVE HUMIDITY
RHC	REHEAT COIL
RHP	RADIANT HEATING PANEL
RL	RAINLEADER
RLF	RELIEF AIR
RPM	REVOLUTIONS PER MINUTE
RPZ	REDUCED PRESSURE ZONE
RX	REMOVE EXISTING
SA	SUPPLY AIR
SF	SQUARE FEET
SH	SENSIBLE HEAT OR SHOWER
SL	SOUND LINING
SP	STATIC PRESSURE
SPEC	SPECIFICATION/PROJECT MANUAL
SQ	SQUARE
SRD	SECONDARY (OVERFLOW) ROOF DRAIN
SRL	SECONDARY (OVERFLOW) RAIN LEADER
S/S	STAINLESS STEEL
STL	STEEL
STRUCT	STRUCTURAL
SWPD	STORM WATER PUMP DISCHARGE
TEMP	TEMPERATURE
TH	TOTAL HEAT
TD	TRENCH DRAIN
THD	THERMODYNAMIC TRAP
TSP	TOTAL STATIC PRESUURE
TYP	TYPICAL
UC	DOOR UNDER CUT
UH	UNIT HEATER
UON	UNLESS OTHERWISE NOTED
UST	UNDERGROUND STORAGE TANK
V	VOLTS
VA	VOLT AMPERES
VAV	VARIABLE AIR VOLUME
VEL	VELOCITY
VFC	VARIABLE FREQUENCY CONTROLLER
VP	VENT PIPE
VTR	VENT THRU ROOF
W	WIDTH
WB	WET BULB
WC	WATER COLUMN
WG	WATER GAGE
W/	WITH
W/O	WITHOUT
WPD	WATER PRESSURE DROP

SYMBOLS

	SUPPLY AIR DUCT (UP,DOWN)
	RETURN/OUTDOOR/RELIEF AIR DUCT (UP,DOWN)
	EXHAUST AIR DUCT (UP,DOWN)
F	FIRE DAMPER WITH ACCESS DOOR
	SMOKE DAMPER WITH ACCESS DOOR
	COMBINATION FIRE AND SMOKE DAMPER WITH ACCESS DOOR
	MANUAL VOLUME DAMPER
	FLEXIBLE CONNECTION (DUCT)
	SOUND ATTENUATOR
	SOUND LINED DUCTWORK
	TRANSITION ROUND TO RECTANGULAR
24x12	DUCT (SIZE IN INCHES; FIRST FIGURE IS SIDE SHOWN)
UP	DUCT OFFSET UP IN DIRECTION OF ARROW
DN	DUCT OFFSET DOWN IN DIRECTION OF ARROW
	ROUND FLEXIBLE DUCT
	SUPPLY AIR TERMINAL UNIT
	SUPPLY AIR TERMINAL UNIT WITH REHEAT COIL
	FAN POWERED AIR TERMINAL UNIT WITH HEATING COIL
	DUCT MOUNTED REHEAT COIL
	SUPPLY AIR DEVICE
	RETURN AIR DEVICE
	EXHAUST AIR DEVICE
	LINEAR SLOT DIFFUSER WITH PLENUM
	SIDEWALL DIFFUSER W/ FIELD FABRICATED PLENUM
	DUCT OR WALL MOUNTED AIR DEVICE
	PROPELLER UNIT HEATER
	FINNED TUBE RADIATION OR RADIANT HEATING PANEL
	RETURN AIR FLOW DIRECTION
	SUPPLY AIR FLOW DIRECTION
Ø	DIAMETER
	CUBIC FEET PER MINUTE
℄	CENTER LINE
	FLAT OVAL
	AREA DRAIN
	FLOOR DRAIN
	ROOF DRAIN/SECONDARY (OVERFLOW) ROOF DRAIN
	FLOOR SINK
	TRENCH DRAIN
XX.XX	INVERT ELEVATION
CO	CLEANOUT IN HORIZONTAL
CO	CLEANOUT IN VERTICAL
	DOMESTIC WATER BACKFLOW PREVENTER
	BACK WATER VALVE (ARROW INDICATES DIRECTION OF FLOW)
SA	SHOCK ABSORBER
HB	HOSE BIBB
WH	NON-FREEZE CONCEALED OUTLET WALL HYDRANT
TP	TRAP PRIMER PIPE
T	SPACE TEMPERATURE SENSOR OR THERMOSTAT
H	SPACE HUMIDITY SENSOR OR HUMIDISTAT
C	SPACE CARBON DIOXIDE SENSOR
	DUCT OR PIPE MOUNTED TEMPERATURE SENSOR/TRANSMITTER
	DUCT MOUNTED HUMIDITY SENSOR/TRANSMITTER
	DUCT MOUNTED CARBON DIOXIDE SENSOR/TRANSMITTER
	DUCT MOUNTED SMOKE DETECTOR
	FREEZESTAT
	CONTROL DAMPER
	STATIC PRESSURE SENSOR/AIR FLOW STATION
	FAN INLET AIR FLOW MEASURING STATION
	TWO WAY CONTROL VALVE
	THREE WAY CONTROL VALVE
	FLOW SWITCH
S OR S	DIFFERENTIAL PRESSURE SWITCH
	DIFFERENTIAL PRESSURE TRANSMITTER
	CURRENT SENSING RELAY
	MANUAL OVERRIDE SWITCH
	MAGNAHELIC PRESSURE GAGE
	ELECTRONIC FLOW METER

	BOUNDARY LINE
SAN	SANITARY/WASTE PIPE
SAN (FOG)	FOOD, OIL, AND GREASE WASTE PIPE
CRW	CHEMICAL RESISTANT WASTE PIPE
D	A/C CONDENSATE AND EQUIPMENT DRAIN PIPE
	VENT PIPE
CRV	CHEMICAL RESISTANT VENT PIPE
SW	STORM WATER PIPE
SSW	SECONDARY (OVERFLOW) STORM WATER PIPE
FND	FOUNDATION DRAIN PIPE
SANPD	SANITARY PUMPED DISCHARGE PIPE
SWPD	STORM WATER PUMPED DISCHARGE PIPE
	DOMESTIC COLD WATER PIPE
	DOMESTIC HOT WATER PIPE (TEMP. IF INDICATED)
	DOMESTIC HOT WATER RECIRCULATING PIPE
ICW	INDUSTRIAL COLD WATER PIPE
IHW	INDUSTRIAL HOT WATER PIPE (TEMP. IF INDICATED)
IHWR	INDUSTRIAL HOT WATER RECIRCULATING PIPE
NP	NON-POTABLE WATER PIPE
TRW	TREATED WATER PIPE
TW	TEMPERED WATER PIPE
ROS	REVERSE OSMOSIS WATER SUPPLY PIPE
ROR	REVERSE OSMOSIS WATER RETURN PIPE
DIS	DEIONIZED WATER SUPPLY PIPE
DIR	DEIONIZED WATER RETURN PIPE
A	COMPRESSED AIR PIPE
G	NATURAL GAS PIPE
V	VACUUM PIPE
VE	VACUUM EXHAUST PIPE
N	NITROGEN GAS PIPE
NO	NITROUS OXIDE GAS PIPE
O	OXYGEN GAS PIPE
SG	SPECIALTY GAS PIPE
F	FIRE SUPPRESSION AND WET-PIPE SPRINKLER PIPE
DP	DRY-PIPE FIRE SUPPRESSION PIPE
P/A	PREACTION FIRE SUPPRESSION PIPE
CHS	CHILLED WATER SUPPLY PIPE
CHR	CHILLED WATER RETURN PIPE
CHS(G)	CHILLED WATER (GLYCOL) SUPPLY PIPE
CHR(G)	CHILLED WATER (GLYCOL) RETURN PIPE
CS	CONDENSER WATER SUPPLY PIPE
CR	CONDENSER WATER RETURN PIPE
HS	HEATING WATER SUPPLY PIPE
HR	HEATING WATER RETURN PIPE
PHS	PRIMARY HEATING WATER SUPPLY PIPE
PHR	PRIMARY HEATING WATER RETURN PIPE
HPS	HIGH PRESSURE STEAM PIPE (_PSIG)
HPR	HIGH PRESSURE CONDENSATE RETURN PIPE
MPS	MEDIUM PRESSURE STEAM PIPE (_PSIG)
MPR	MEDIUM PRESSURE CONDENSATE RETURN PIPE
LPS	LOW PRESSURE STEAM PIPE (_PSIG)
LPR	LOW PRESSURE CONDENSATE RETURN PIPE
STM(H)	HUMIDIFICATION STEAM PIPE
PCR	PUMPED CONDENSATE RETURN PIPE
VV	STEAM VAPOR VENT PIPE
RR	REFRIGERANT RELIEF PIPE
RS	REFRIGERANT SUCTION PIPE
RL	REFRIGERANT LIQUID PIPE
HG	HOT GAS REFRIGERANT PIPE
FOS	FUEL OIL SUPPLY PIPE
FOR	FUEL OIL RETURN PIPE
HTHWS	HIGH TEMPERATURE HOT WATER SUPPLY PIPE
HTHWR	HIGH TEMPERATURE HOT WATER RETURN PIPE
DTS	DUAL TEMPERATURE SUPPLY
DTR	DUAL TEMPERATURE RETURN
	FLOW DIRECTION ARROW
	PIPE UP
	PIPE DOWN
	PIPE/DUCT CAP
	UNION
	FLANGED CONNECTION
	PIPE ANCHOR
	PIPE GUIDE
	CONCENTRIC REDUCER
	ECCENTRIC REDUCER
	FLEXIBLE CONNECTION (PIPING)
/	SHUTOFF VALVE (IN HORIZONTAL / IN VERTICAL)
	THROTTLING VALVE
	MANUAL BALANCING VALVE
	AUTOMATIC BALANCING VALVE
	CHECK VALVE (ARROW INDICATES DIRECTION OF FLOW)
	PRESSURE REDUCING VALVE
	PRESSURE RELIEF VALVE
	HOSE END DRAIN
	PRESSURE GAGE WITH ISOLATION VALVE
	TEMPERATURE GAGE/THERMOMETER
	FLOW METER FITTING
	COMBINATION BALANCING VALVE & FLOW METER FITTING
	PRESSURE AND TEMPERATURE PLUG
	AUTOMATIC AIR VENT
	MANUAL AIR VENT
	STRAINER WITH VALVE

DRAWING CONVENTIONS

SYMBOL	DESCRIPTION
	INDICATES DIRECTION OF CUTTING PLANE
A / MX	NUMBER OR LETTER INDICATES SECTION OR ELEVATION
	DRAWING NUMBER WHERE ELEVATION OR SECTION IS TAKEN OR DRAWN
S / X	SANITARY RISER NUMBER
CRW / X	CORROSIVE WASTE RISER NUMBER
W / X	DOMESTIC WATER RISER NUMBER
IW / X	INDUSTRIAL WATER RISER NUMBER
SW / X	STORM WATER RISER NUMBER
V / X	VACUUM RISER NUMBER
A / X	COMPRESSED AIR RISER NUMBER
G / X	NATURAL GAS RISER NUMBER
RO / X	REVERSE OSMOSIS RISER NUMBER
P-CHX	EQUIPMENT DESIGNATION
	NUMERICAL DESIGNATION
	EQUIPMENT SERVICE DESIGNATION
	EQUIPMENT TYPE DESIGNATION
	PLUMBING FIXTURE DESIGNATION, P-X

SYMBOL	DESCRIPTION
	POINT OF CONNECTION, NEW TO EXISTING
	DEMOLITION WORK TERMINATION POINT
	INDICATES AIR DEVICE
X	LETTER INDICATES AIR DEVICE DESIGNATION. REFER TO SCHEDULE FOR SIZE AND TYPE
	INDICATES SPECIAL NOTE
X	NUMBER INDICATES SPECIAL NOTE DESIGNATION. REFER TO SPECIAL NOTE LIST ON DRAWING FOR DESCRIPTION OF ITEM
	HEAVY LINE WEIGHT DESIGNATES NEW WORK ON NEW WORK PLANS, AND REMOVAL WORK ON DEMOLITION PLANS
	LIGHT LINE WEIGHT DESIGNATES EXISTING WORK TO REMAIN

DUCTWORK CONVENTIONS

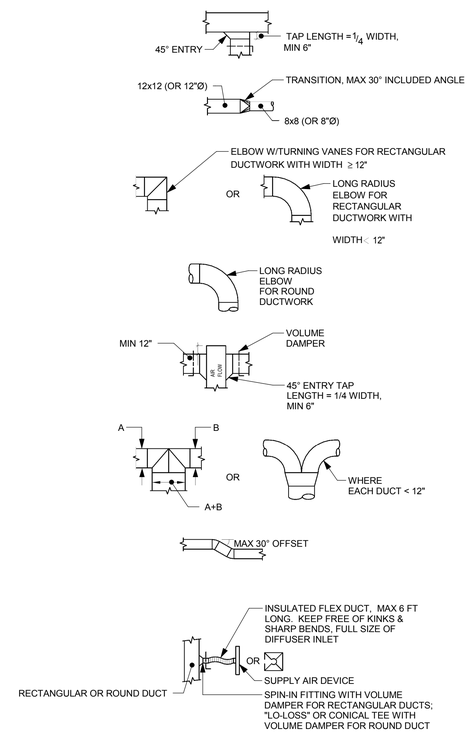

DESIGN CRITERIA

DESIGNED IN COMPLIANCE WITH VIRGINIA UNIFORM STATEWIDE BUILDING CODE, 2009

- 2009 INTERNATIONAL MECHANICAL CODE
- 2009 INTERNATIONAL PLUMBING CODE
- 2009 INTERNATIONAL FUEL GAS CODE

QUINN EVANS ARCHITECTS

2121 WARD PLACE, NW
FOURTH FLOOR
WASHINGTON, DC 20007

v 202 298 6700
f 202 298 6666

WWW.QUINNEVANS.COM

Mueller

Mueller Associates, Inc.
Consulting Engineers
1401 S. Edgewood Street
Baltimore, Maryland 21227
410.646.4500 tel > 410.646.4738 fax
www.muellerassoc.com

FERRY FARM PHASE 1 IMPROVEMENTS M&O BUILDING

268 Kings Hwy, Fredericksburg, VA 22405

QEA # 31402900

MECHANICAL LEGEND

COMMONWEALTH OF VIRGINIA
DANIEL CARMINE
Lic. No. 040419
PROFESSIONAL ENGINEER
6/30/15

BUILDING PERMIT SUBMISSION
06/30/15

REVISIONS

NO.	DESCRIPTION	DATE

M-001

6/24/2015 5:26:20 PM C:\Users\test\Documents\Ferry Farm M&O Building MEP Central_test.rvt

PACKAGED OUTDOOR AIR HANDLING UNIT

GENERAL						FANS			COOLING COIL									NATURAL GAS HEATING COIL				FILTERS	CONDENSER FAN DATA		COMPRESSOR			ELECTRICAL CONNECTION	BASIS OF DESIGN MANUFACTURER / MODEL #	REMARKS
DESIG	TOTAL AIRFLOW (CFM)		NOMINAL TONS	MIN OUTSIDE AIRFLOW (CFM)	MAX INTERNAL S.P. (IN WG) (NOTE 2)	DESIG	MIN INTERNAL S.P. (IN WG)	TOTAL S.P. (IN WG)	DESIG	SENSIBLE MBH	TOTAL MBH	MIN EER	OUTDOOR AIR °F	EAT (°F)		LAT (°F)		DESIG	EAT (°F)	LAT (°F)	CAPACITY (MBH)	(SEE SCHEDULE)	QUANTITY	FLA	QUANTITY	KW (TOTAL)	RLA (EACH)	V / PH / HZ		
	MAX	MIN												DB	WB	DB	WB													
AHU-1	2400	2400	7.5	700	0.55	SF-1	0.70	1.25	CC-1	60	86.3	12.5	95	80.8	67.9	58.1	56.5	HC-1	52.5	99	120	FF-1	1	3.5	2	6.0	15.9	208 / 60 / 3	TRANE PRECEDENT YHC092	---

NOTES:

1. COIL CAPACITIES SHALL BE BASED ON AHU OPERATING AT SCHEDULED MAXIMUM TOTAL AIRFLOW WITH SCHEDULED MINIMUM OCCUPIED OUTSIDE AIR.
2. UNIT INTERNAL STATIC PRESSURE DROP INCLUDES ALLOWANCE FOR SYSTEM EFFECTS, COILS, UNIT DAMPER LOSSES, AND 0.3" FOR FILTER LOADING.

FANS

DESIG	TYPE (SEE SPEC)	SERVICE	AIRFLOW (CFM)		TOTAL STATIC PRESSURE (IN WG)	WHEEL DIAMETER (IN)	SPEED (RPM)	BHP	MOTOR HP	ELECTRICAL			REMARKS
			MAX	MIN						VOLTS	PH	HZ	
EF-1	PF	JANITORS CLOSET	450	450	0.20	20	611	0.10	0.25	120	1	60	NOTES 1,3
EF-2	PF	MEP PARTS STORAGE	350	350	0.20	20	591	0.10	0.25	120	1	60	NOTES 1,3
EF-3	PF	MECHANICAL ROOM	550	550	0.20	20	632	0.11	0.25	120	1	60	NOTES 1,3
EF-4	PF	WORKSHOP	2000	2000	0.50	20	1165	0.49	0.75	120	1	60	NOTES 1,3
EF-5	PF	WORKSHOP	2000	2000	0.50	20	1165	0.49	0.75	120	1	60	NOTES 1,3
EF-6	IL	TOILET ROOMS	200	200	0.35	10	1035	0.07	0.25	120	1	60	NOTE 2

NOTES:

1. BASIS OF DESIGN: GREENHECK SBE-1H20.
2. BASIS OF DESIGN: GREENHECK BSQ-80-4.
3. UNIT SHALL BE MOUNTED WITH WALL HOUSING AND INCLUDE BACKDRAFT DAMPERS, GUARDS, AND WEATHERHOODS.

FILTERS

DESIG	TYPE (SEE SPEC)	LOCATION	SERVICE	MERV	MAX FACE VELOCITY (FPM)	DEPTH (IN)	INITIAL / FINAL APD (IN WG)	QUANTITY & APPROX SIZE LxW (IN)	REMARKS
FF-1	FF	AHU-1	FINAL FILTER	13	300	2	0.15 / 0.30	4 @ 25x20	---

GAS FIRED UNIT HEATERS

DESIG	LOCATION	BTU/HR INPUT	BTU/HR OUTPUT	ENTERING AIRFLOW @ 70°F (CFM)	AIR TEMP RISE (°F)	GAS INLET PRESSURE (IN W.C.)	VOLTS/PHASES/HZ	REMARKS
UH-1	WORKSHOP	30,000	24,000	500	44	6-7	120/1/60	---

NOTES:

1. PROVIDE TWO STAGE CONTROLS FOR ALL UNIT HEATERS.
2. BASIS OF DESIGN: MODINE HD30.

AIR CURTAINS

DESIG	LOCATION	LENGTH (IN)	MINIMUM VERTICAL THROW (IN)	LOAD	VOLTS/PHASES/HZ	REMARKS
AC-1	RECEIVING	120	144	2 @ 1 HP	208/3/60	NOTE 1, NOTE 2

NOTES:

1. UNIT LENGTH SHALL MATCH DOOR OPENING.
2. BASIS OF DESIGN: MARS AIR SYSTEMS MODEL HV2120-2U - UNHEATED.

FINNED TUBE RADIATION

DESIG	TYPE	LOCATION	LENGTH (IN)	HEATING CAPACITY (W/LF)	ELECTRICAL		NOTES
					LOAD (AMPS)	VOLTS/PH/HZ	
FTR-1	I	SEE PLANS	30	200	4.2	120/1/60	---

NOTES:

1. SELECTION BASED ON AN ENTERING AIR TEMPERATURE OF 70°F.
2. BASIS OF DESIGN: VULCAN LBT.

AIR DEVICES

DESIG	TYPE (SEE SPEC)	SERVICE	AIRFLOW RANGE		NOMINAL SIZE (IN)	INLET/NECK SIZE (IN)	BASIS OF DESIGN
			MIN CFM	MAX CFM			
1	SG	SUPPLY	0	180	10x6	10x6	TITUS 300
2	PSD	SUPPLY	100	150	(2) 3/4" SLOTS - 48" L	8"ø	TITUS TBDI-30
3	CD	SUPPLY	105	205	24 x 24	8"ø	TITUS OMNI
4	CD	SUPPLY	210	360	24 x 24	10"ø	TITUS OMNI
5	CR	EXHAUST	0	100	24 x 24	6"ø	TITUS OMNI
6	CR	RETURN	105	205	24 x 24	8"ø	TITUS OMNI
7	CR	RETURN	505	600	24 x 24	14"ø	TITUS OMNI
8	RG	RETURN	0	100	6x6	6x6	TITUS 350
9	RG	RETURN	220	420	12x12	12x12	TITUS 350
10	RG	RETURN	420	500	16x12	16x12	TITUS 350

NOTES:

1. AIR DEVICES WITH SERVICE DESIGNATED "RETURN" ALSO USED FOR AIR TRANSFER DUTY.
2. AIR DEVICES SHALL BE SELECTED FOR A MAXIMUM NOISE LEVEL OF NC-30.

Ventilation and Exhaust Air Calculations

Building: Ferry Farm M&O Building

Date 1/15/2014

Space Schedule					Ventilation Calcs by IMC/VA USBC 2009							Exhaust Air		
Room: Number	Room: Name	Occupancy Classifications	Area (SF)	Occupants	R_p (CFM/Occ)	V_p (CFM)	R_a (CFM/SF)	V_a (CFM)	V_{bz} (CFM)	E_z	V_{oz} (CFM)	CFM (per fixture)	CFM (per area)	Design CFM
						=R_p * Occupants		=R_a * Area	=V_a + V_p	(note 2)	=V_z / E_z	=75 Per Fixture	= Area * 2	
108	Receiving / Staging	Shipping/Receiving	815	2	0	0	0.12	98	98	0.8	125			
109	Event Storage	Storage - Warehouses	187	0	0	0	0.06	11	11	0.8	15			
104	Break Room	Break Room	275	6	5	30	0.06	17	47	0.8	60			
105	Corridor	Corridor	311	0	0	0	0.06	19	19	0.8	25			
106	ADA Restroom	Toilet	55	0	0	0	0	0	0	0.8	0	75	100	100
107	ADA Restroom 2	Toilet	55	0	0	0	0	0	0	0.8	0	75	100	100
101	Work Area	Office	204	2	5	10	0.06	12	22	0.8	30			
102	Office	Office	75	1	5	5	0.06	5	10	0.8	15			
103	Map & File	Office	75	1	5	5	0.06	5	10	0.8	15			
Totals			2,052	12					Total V_{oz}		285	Total EA (CFM)=		200
									E_v		1			
									AHU Total OA required =V_{oz}/E_v		300			
									Selected AHU OA		700			

Notes:

1. Refer to Table 403.3 - Minimum Ventilation Rates of the 2009 International Mechanical Code for R_p and R_a values corresponding the the listed Occupancy Classifications.
2. E_z chosen (0.8) corresponds to the Air Distribution Configuration of "Ceiling supply of warm air and ceiling return".

QUINN EVANS ARCHITECTS

2121 WARD PLACE, NW
FOURTH FLOOR
WASHINGTON, DC 20007

v 202 298 6700
f 202 298 6666

WWW.QUINNEVANS.COM

Mueller

Mueller Associates, Inc.
Consulting Engineers
1401 S. Edgewood Street
Baltimore, Maryland 21227
410.646.4500 tel > 410.646.4738 fax
www.muellerassoc.com

FERRY FARM PHASE 1 IMPROVEMENTS M&O BUILDING

268 Kings Hwy, Fredericksburg, VA 22405

QEA # 31402900

SCHEDULES

COMMONWEALTH OF VIRGINIA
C. DANIEL CARMINE
Lic. No. 040419
PROFESSIONAL ENGINEER
6/30/15

BUILDING PERMIT SUBMISSION
06/30/15

REVISIONS

NO.	DESCRIPTION	DATE

M-500

6/24/2015 5:28:44 PM C:\Users\ted\Documents\Ferry Farm M&O Building MEP Central_kas.rvt

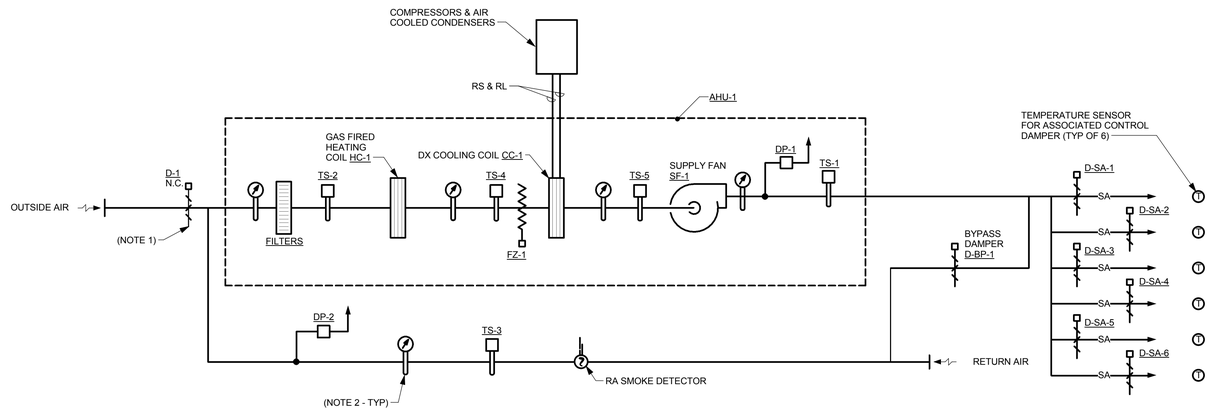

NOTES:

1. DAMPER PROVIDED BY AHU MANUFACTURER; OPERATOR PROVIDED BY ATC CONTRACTOR.
2. THERMOMETER PROVIDED BY AHU MANUFACTURER (TYP). THERMOMETER SHALL HAVE A VISUAL READOUT.

1 / M-400 PACKAGED AIR HANDLING UNIT AHU-1
NOT TO SCALE

SEQUENCE OF OPERATION TO BE PROVIDED IN SPECIFICATION SECTION 230993

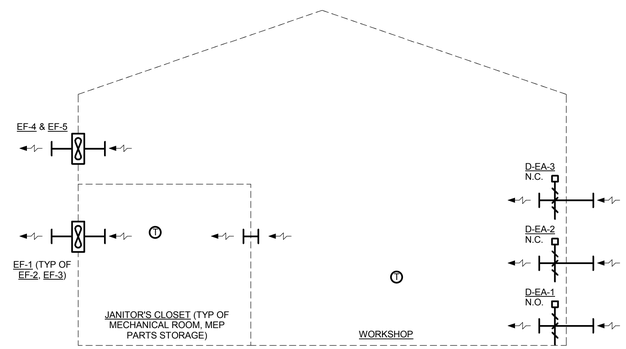

2 / M-400 WORKSHOP COOLING SCHEMATIC
NOT TO SCALE

SEQUENCE OF OPERATION TO BE PROVIDED IN SPECIFICATION SECTION 230993

QUINN EVANS ARCHITECTS

2121 WARD PLACE, NW
FOURTH FLOOR
WASHINGTON, DC 20007

v 202 298 6700
f 202 298 6666

WWW.QUINNEVANS.COM

Mueller

Mueller Associates, Inc.
Consulting Engineers
1401 S. Edgewood Street
Baltimore, Maryland 21227
410.646.4500 tel > 410.646.4738 fax
www.muellerassoc.com

FERRY FARM PHASE 1 IMPROVEMENTS M&O BUILDING

268 Kings Hwy, Fredericksburg, VA 22405

QEA # 31402900

ATC SCHEMATICS

COMMONWEALTH OF VIRGINIA
DANIEL CARMINE
Lic. No. 040419
PROFESSIONAL ENGINEER
6/30/15

BUILDING PERMIT SUBMISSION
06/30/15

REVISIONS

NO.	DESCRIPTION	DATE

M-400

6/24/2015 5:26:38 PM C:\Users\wei\Documents\Ferry Farm M&O Building MEP Central_kes.rvt

ABBREVIATIONS

A	AMPERES
AC	ALTERNATING CURRENT
ACU	AIR CONDITIONING UNIT
AF	AMPERES FRAME
AFF	ABOVE FINISHED FLOOR
AFG	ABOVE FINISHED GRADE
AHU	AIR HANDLING UNIT
AIC	AMPERES INTERRUPTING CAPACITY
ARCH	ARCHITECTURAL
AT	AMPERES TRIP
ATC	AUTOMATIC TEMPERATURE CONTROL
AWG	AMERICAN WIRE GAGE
A/V	AUDIOVISUAL
BLDG	BUILDING
C	CONDUIT
CB	CIRCUIT BREAKER
CKT	CIRCUIT
CLG	CEILING
CPT	CONTROL POWER TRANSFORMER
CT	CURRENT TRANSFORMER
CX	CONNECT TO EXISTING
DC	DIRECT CURRENT
DESIG	DESIGNATION
DN	DOWN
DWG	DRAWING
DX	DISCONNECT EXISTING
EA	EACH
EC	EMPTY CONDUIT
ECB	ENCLOSED CIRCUIT BREAKER
EF	EXHAUST FAN
EH	ELECTRIC HEATER
ELEC	ELECTRIC
EMH	ELECTRIC MANHOLE
EMT	ELECTRICAL METALLIC TUBING
EQUIP	EQUIPMENT
EWC	ELECTRIC WATER COOLER
EHW	ELECTRIC WATER HEATER
EX	EXISTING
F	FUSE
FDAS	FIRE DETECTION ALARM SYSTEM
FDR	FEEDER
FLA	FULL LOAD AMPERES
FMC	FLEXIBLE METAL CONDUIT
FSS	FUSED SAFETY SWITCH
FT	FOOT OR FEET
FVNR	FULL VOLTAGE NON-REVERSING
G	GROUND FAULT CIRCUIT INTERRUPTER
GND	GROUND
HID	HIGH INTENSITY DISCHARGE
HOA	HAND-OFF-AUTOMATIC
HP	HORSEPOWER
HPS	HIGH PRESSURE STEAM
HTR	HEATER
HV	HIGH VOLTAGE
HZ	HERTZ
IMC	INTERMEDIATE METAL CONDUIT
JB	JUNCTION BOX
KCMIL	THOUSAND CIRCULAR MILS
KV	KILOVOLT(S)
KVA	KILOVOLT-AMPERE(S)
KW	KILOWATT(S)
LFMC	LIQUIDTIGHT FLEXIBLE METAL CONDUIT
LTG	LIGHTING
MAFC	MAKE ALL FINAL CONNECTIONS
MCB	MAIN CIRCUIT BREAKER
MCC	MOTOR CONTROL CENTER
MCP	MOTOR CIRCUIT PROTECTOR
MH	MOUNTING HEIGHT (TO CENTERLINE OF DEVICE UNLESS OTHERWISE NOTED)
MLO	MAIN LUGS ONLY
MMS	MANUAL MOTOR STARTER
MOA	MULTI-OUTLET ASSEMBLY
MS	MANUAL SWITCH
MTD	MOUNTED
MV	MEDIUM VOLTAGE
N	NEUTRAL
NC	NORMALLY CLOSED
NEC	NATIONAL ELECTRICAL CODE
NEMA	NATIONAL ELECTRICAL MANUFACTURERS ASSOCIATION
NFS	NON-FUSED SWITCH
NIC	NOT IN CONTRACT
NO	NORMALLY OPEN
OL	OVERLOAD
P	POLE
PH	PHASE
PNL	PANEL
PVC	POLYVINYL CHLORIDE
RECEPT	RECEPTACLE(S)
REQ'D	REQUIRED
RF	RETURN FAN
RMC	RIGID METAL CONDUIT
RM(S)	ROOMS
RVAT	REDUCED VOLTAGE AUTOTRANSFORMER
RX	REMOVE EXISTING
SF	SUPPLY FAN
SMR	SURFACE METAL RACEWAY
SW	SWITCH
SWBD	SWITCHBOARD
SWGR	SWITCHGEAR
TA	TRIP AMPERES
TTB	TELEPHONE TERMINAL BOARD
TTC	TELEPHONE TERMINAL CABINET
TYP	TYPICAL
UG	UNDERGROUND
UH	UNIT HEATER
UON	UNLESS OTHERWISE NOTED
V	VOLT(S)
VA	VOLT-AMPERE(S)
VT	VOLTAGE TRANSFORMER
VFC	VARIABLE FREQUENCY CONTROLLER
W	WIRE
W/	WITH
WP	WEATHERPROOF
XFMR	TRANSFORMER

SYMBOLS

POWER - FLOOR PLANS

- SINGLE RECEPTACLE MOUNTED 18" AFF, UNLESS OTHERWISE NOTED
- DUPLEX RECEPTACLE MOUNTED 18" AFF, UNLESS OTHERWISE NOTED
  SUBSCRIPTS AS FOLLOWS
  E - CONNECTED TO EMERGENCY CIRCUIT
  G - GROUND FAULT INTERRUPTER TYPE
  IG - ISOLATED GROUND
  WC - WATER COOLER
  WP - WEATHERPROOF (WET LOCATION)
  84" - MOUNTING HEIGHT AS INDICATED
- DUPLEX RECEPTACLE MOUNTED ABOVE COUNTER, 6" ABOVE BACKSPLASH
- QUAD RECEPTACLE MOUNTED 18" AFF, UNLESS OTHERWISE NOTED
- SPECIAL RECEPTACLE MOUNTED 18" AFF, UNLESS OTHERWISE NOTED (NEMA CONFIGURATION AS INDICATED)
- SINGLE RECEPTACLE MOUNTED IN FLOOR
- DUPLEX RECEPTACLE MOUNTED IN FLOOR
- QUAD RECEPTACLE MOUNTED IN FLOOR
- SPECIAL RECEPTACLE MOUNTED IN FLOOR (NEMA CONFIGURATION AS INDICATED)
- FB SPECIALTY FLOOR BOX
- FB POKE-THRU TYPE FLOOR BOX
- J JUNCTION BOX MOUNTED IN FLOOR
- DUPLEX RECEPTACLE MOUNTED FLUSH IN CEILING
- QUAD RECEPTACLE MOUNTED FLUSH IN CEILING
- C CLOCK HANGER OUTLET MOUNTED 90" AFF, UNLESS OTHERWISE NOTED
- DUPLEX RECEPTACLES MOUNTED IN MULTI-OUTLET ASSEMBLY
- 208Y/120V PANELBOARD (SURFACE MOUNTED)
- 208Y/120V PANELBOARD (FLUSH MOUNTED)
- 480Y/277V PANELBOARD (SURFACE MOUNTED)
- 480Y/277V PANELBOARD (FLUSH MOUNTED)
- J JUNCTION BOX
- P PROJECTOR CONNECTION. PROVIDE DUPLEX RECEPTACLE MOUNTED FLUSH IN CEILING.
- H HEATER CONNECTION
- G ENGINE GENERATOR SET
- M MOTOR CONNECTION
- PUSHBUTTON
- NON-FUSIBLE SWITCH
- FUSIBLE SWITCH
- MAGNETIC MOTOR STARTER
- COMBINATION MAGNETIC MOTOR STARTER
- ENCLOSED CIRCUIT BREAKER
- T TRANSFORMER
- VFC VARIABLE FREQUENCY CONTROLLER
- GROUND ROD
- M MANUAL MOTOR STARTER WITH HAND-OFF-AUTOMATIC
- UNDERGROUND DUCT BANK
- SINGLE STATION SMOKE DETECTOR 120V WITH BATTERY BACK-UP ALL DEVICES SHALL BE CONNECTED SUCH THAT IF ONE SOUNDS, ALL SOUND.

LIGHTING

- SINGLE POLE SWITCH MOUNTED 48" ABOVE FINISHED FLOOR, UNLESS OTHERWISE NOTED
  SUBSCRIPTS AS FOLLOWS:
  3 - THREE WAY SWITCH
  4 - FOUR WAY SWITCH
  D - DIMMER SWITCH
  P - SWITCH WITH PILOT LIGHT
  K - KEY-OPERATED SWITCH
  T - TIME SWITCH
  WP - SWITCH WITH WEATHERPROOF COVER
  OS - OCCUPANCY SENSOR
  a - LOWER CASE LETTER INDICATES SWITCH LEG
- FLUORESCENT LIGHTING FIXTURE
- FLUORESCENT LIGHTING FIXTURE, PENDANT MOUNTED
- FLUORESCENT LIGHTING FIXTURE, WALL MOUNTED
- INDUSTRIAL FLUORESCENT LIGHTING FIXTURE
- LIGHTING TRACK
- LIGHTING FIXTURE, TRACK MOUNTED
- INCANDESCENT, OR COMPACT FLUORESCENT, OR HID LIGHTING FIXTURE, CEILING-MOUNTED
- LED LIGHTING FIXTURE, WALL-MOUNTED
- INCANDESCENT, OR COMPACT FLUORESCENT, WALL WASHER
- LED LIGHTING FIXTURE, PENDANT MOUNTED
- EXIT SIGN - BACK MOUNTED WITH DIRECTIONAL INDICATORS AS SHOWN
- EXIT SIGN - TOP OR PENDANT MOUNTED, SINGLE FACE WITH DIRECTIONAL INDICATORS AS SHOWN
- EXIT SIGN - TOP OR PENDANT MOUNTED, DOUBLE FACE WITH DIRECTIONAL INDICATORS AS SHOWN
- EMERGENCY LIGHTING UNIT MOUNTED 90" AFF
- OS OCCUPANCY SENSOR, CEILING MOUNTED - ARROWS INDICATE DIRECTION OF SENSOR BEAM AIMING
- OS OCCUPANCY SENSOR, WALL MOUNTED - ARROWS INDICATE DIRECTION OF SENSOR BEAM AIMING
- PC PHOTOELECTRIC CONTROL SWITCH
- TC TIMECLOCK
- C CONTACTOR MOUNTED 5'-6" TO TOP OF ENCLOSURE

DRAWING CONVENTIONS

SYMBOL	DESCRIPTION
	POINT OF CONNECTION - NEW TO EXISTING
	DEMOLITION WORK TERMINATION POINT
1	INDICATES FEEDER NUMBER INDICATES FEEDER DESIGNATION. REFER TO FEEDER SCHEDULE FOR CONDUCTOR AND CONDUIT SIZE
1	INDICATES SPECIAL NOTE NUMBER INDICATES SPECIAL NOTE DESIGNATION REFER TO SPECIAL NOTE LIST ON DRAWING FOR DESCRIPTION OF ITEM
XX X	LIGHTING FIXTURE SWITCH DESIGNATION LIGHTING FIXTURE TYPE, REFER TO LIGHTING FIXTURE SCHEDULE
	DIAGONAL LINE INDICATES EMERGENCY LIGHTING FIXTURE
A XX	INDICATES DIRECTION OF CUTTING PLANE NUMBER OR LETTER INDICATES SECTION OR ELEVATION DRAWING NUMBER WHERE ELEVATION OR SECTION IS TAKEN OR DRAWN
XXX/X,X #8 E	INDICATES PANELBOARD OR MOTOR CONTROL CENTER DESIGNATION AND CIRCUIT NUMBER BRANCH CIRCUIT HOME RUN; ARROWHEADS INDICATE NUMBER OF CIRCUITS INDICATES WIRE SIZE (AWG OR CIRCULAR MILS) IF OTHER THEN #12 SHORT CROSSHATCH LINES INDICATE PHASE CONDUCTORS (#12 UNLESS OTHERWISE NOTED) LONG CROSSHATCH LINES INDICATE NEUTRAL CONDUCTORS (#12 UNLESS OTHERWISE NOTED) LONG CROSSHATCH LINES WITH DOT AT THE END INDICATE GROUND CONDUCTORS (#12 UNLESS OTHERWISE NOTED) CIRCUIT WITHOUT CROSSHATCH LINES INDICATES 3#12 IN 3/4"C "E" INDICATES EMERGENCY CIRCUIT WITH 3#10 IN 3/4"C
	CONDUIT RUN CONCEALED IN WALL OR CEILING IN FINISHED AREAS, EXPOSED IN UNFINISHED AREAS (3#12 IN 3/4"C UNLESS OTHERWISE NOTED)
	CONDUIT UNDERGROUND OR UNDER SLAB (3#12 IN 3/4"C UNLESS OTHERWISE NOTED)
	CONDUIT UP
	CONDUIT DOWN
	HEAVY LINE WEIGHT DESIGNATES NEW WORK ON NEW WORK PLANS, REMOVAL WORK ON DEMOLITION PLANS
	LIGHT LINE WEIGHT DESIGNATES EXISTING WORK TO REMAIN

GENERAL NOTES

1. CONTRACT DRAWINGS ARE DIAGRAMMATIC AND INDICATE THE GENERAL ARRANGEMENT OF SYSTEMS AND WORK INCLUDED IN THE CONTRACT. ALL CONDUIT RACEWAY OFFSETS, RISES AND DROPS HAVE NOT BEEN INDICATED. THEREFORE, THE CONTRACTOR MUST CAREFULLY INVESTIGATE THE CONDITIONS AFFECTING THE WORK, AND ARRANGE SUCH ACCORDINGLY, PROVIDING NECESSARY FITTINGS AND ACCESSORIES THAT MAY BE REQUIRED TO MEET SUCH CONDITIONS.
2. ALL COMPONENTS SHOWN ON ONE-LINE DIAGRAMS, BUT NOT ON PLAN OR VICE VERSA, SHALL BE INCLUDED AS IF SHOWN ON BOTH.
3. WHERE ELECTRICAL WORK PENETRATES WALLS, PARTITIONS, FLOORS OR CEILINGS, PROVIDE SLEEVES AS SPECIFIED. PATCH, SEAL AND FINISH TO MATCH SURFACE PENETRATED. DO NOT CUT/PENETRATE STRUCTURAL MEMBERS.
4. ALL CONDUIT SHALL BE RUN PERPENDICULAR TO WALLS, CEILING, OR FLOOR AS APPLICABLE IN A NEAT RECTILINEAR MANNER.
5. GENERAL NOTES APPLY TO ALL DRAWINGS. DRAWING NOTES APPLY TO THE DRAWING THEY ARE ON. SPECIAL NOTES APPLY SPECIFICALLY TO THE ITEMS EACH NOTE POINTS TO.

QUINN EVANS ARCHITECTS

2121 WARD PLACE, NW
FOURTH FLOOR
WASHINGTON, DC 20007

v 202 298 6700
f 202 298 6666

WWW.QUINNEVANS.COM

Mueller

Mueller Associates, Inc.
Consulting Engineers
1401 S. Edgewood Street
Baltimore, Maryland 21227
410.646.4500 tel > 410.646.4738 fax
www.muellerassoc.com

FERRY FARM PHASE 1 IMPROVEMENTS M&O BUILDING

268 Kings Hwy, Fredericksburg, VA 22405

QEA # 31402900

ELECTRICAL LEGEND

COMMONWEALTH OF VIRGINIA
KENNETH H. ROCK
Lic. No. 035558
6/30/15
PROFESSIONAL ENGINEER

BUILDING PERMIT SUBMISSION
06/30/15

REVISIONS

NO.	DESCRIPTION	DATE

E-001

6/25/2015 10:04:33 AM C:\Users\pcc\Desktop\Revit Local Files\131701 (RVT 2014)Ferry Farm M&O Building MEP Central_pcc.rvt

DISTRIBUTION PANELBOARD:	MDP	BUS RATING:	400 A	MAIN:	3P 400A MCB
MIN AIC:	42,000	VOLTS:	208Y/120V	PHASES: 3	WIRES: 4
ENCLOSURE:	NEMA 1	MOUNTING:	SURFACE	FED FROM:	
LOCATION:	Mechanical Room 112	NOTES:			

CIRCUIT #	ITEM SERVED	CIRCUIT BREAKER FRAME	TRIP	POLE	CONNECTED LOAD (KVA)	REMARKS
1	PANEL RP	225.0	150.0	3	32.9	
2	AHU-1	100.0	60.0	3	13.7	
3	TRASH COMPACTOR	100.0	60.0	3	11.1	
4	AIR CURTAIN IN RECEIVING/STAGING (108)	100.0	20.0	3	5.0	
5	RECEPT - WELDER IN PAINT/CARPENTRY WORKSHOP (116)	100.0	50.0	2	10.4	
6	RECEPT - BAND SAW IN SMALL BAY EQUIPMENT STORAGE (115)	100.0	20.0	2	5.0	
7	RECEPT - WELDER IN PASS THROUGH WORK BAY (115)	100.0	50.0	2	10.4	
8	ROLL UP DOOR - RECEIVING / STAGING 108	400.0	20.0	2	1.6	
9	ROLL UP DOOR - PASS THROUGH WORK BAY 114	400.0	20.0	2	1.6	
10	ROLL UP DOOR - SMALL BAY EQUIPMENT STORAGE 115	400.0	20.0	2	1.6	
11	ROLL UP DOOR - PAINT / CARPENTRY WORSHOP 116	400.0	20.0	2	1.6	
12	PUMP STATION	100.0	35.0	3	7.6	
13	SPACE WITH PROVISIONS	--	--	--	0.0	--
14	SPACE WITH PROVISIONS	--	--	--	0.0	--
15	SPACE WITH PROVISIONS	--	--	--	0.0	--
16	SPACE WITH PROVISIONS	--	--	--	0.0	--
17	SPACE WITH PROVISIONS	--	--	--	0.0	--
18	SPACE WITH PROVISIONS	--	--	--	0.0	--
19	SPACE WITH PROVISIONS	--	--	--	0.0	--
20	SPACE WITH PROVISIONS	--	--	--	0.0	--
		CONNECTED LOAD:			102.4 kVA	284.2 A
		DEMAND LOAD:			100.2 kVA	278.2 A

PANELBOARD:	RP	BUS RATING:	225 A	MAIN:	MLO
MIN AIC:	42,000	VOLTS:	208Y/120V	PHASES: 3	WIRES: 4
ENCLOSURE:	NEMA 1	MOUNTING:	SURFACE	FED FROM:	MDP
LOCATION:	Mechanical Room 112	NOTES:			

CKT	SERVES	CB P	CB TA	LOAD (kVA) A	B	C	A	B	C	CB TA	CB P	SERVES	CKT
1	LIGHTING - 114, 115, 116	1	20	1.7			0.7			20	1	RECEPT - PAINT/ CARPENTRY WORKSHOP (116)	2
3	LIGHTING - 110, 111, 112	1	20		1.0			0.4		20	1	RECEPT - JANITORS/MEP STORAGE (110/111)	4
5	LIGHTING - 101, 102, 103, 106, 107	1	20			0.7			0.9	20	1	RECEPT - BREAK ROOM (104)	6
7	LIGHTING - 108	1	20	0.7			0.5			20	1	RECEPT - MAP & FILE (103)	8
9	LIGHTING - EXTERIOR LIGHTS	1	20		1.1			1.1		20	1	RECEPT - WORK AREA (101)	10
11	LIGHTING - 104, 109, CORRIDOR	1	20			0.9			0.7	20	1	RECEPT - EXTERIOR NORTH	12
13	EF-1 IN 110	1	20	0.7			2.5			30	1	RECEPT - GOLF CART	14
15	EF-2 IN 111	1	20		0.7			0.8		20	1	RECEPT - MECH/ELEC ROOMS (112)	16
17	EF-3 IN 112	1	20			0.7			1.2	20	1	RECEPT - REFRIGERATOR IN BREAK ROOM (02)	18
19	EF-4 IN 110	1	30	1.7			0.7			20	1	RECEPT - EXTERIOR SOUTH	20
21	EF-5 IN 111	1	30		1.7			0.5		20	1	RECEPT - SMALL BAY EQUIP STORAGE (115)	22
23	EF-6 IN 110	1	20			0.7			0.4	20	1	RECEPT - PASS THROUGH WORK BAY (114)	24
25	UNIT HEATERS IN 108, 114	1	20	0.9			0.5			20	1	RECEPT - OFFICE (102)	26
27	UNIT HEATERS IN 115,116	1	20		0.9			1.1		20	1	RECEPT - RECEIVING/STAGING & EVENT (108/109)	28
29	FINNED TUBE RADIATORS IN 110, 111, 112	1	20			1.5			0.9	20	1	RECEPT - RESTROOMS 1/2 & CORRIDOR (106/107)	30
31	FINNED TUBE RADIATORS IN 106,107	1	20	1.0			0.5			20	1	RECEPT - WATER FOUNTAIN IN CORRIDOR	32
33	DWH-1	1	20		0.0			0.7		20	1	RECEPT - ICE MAKER IN BREAK ROOM (104)	34
35	SPARE	1	20			0.0			1.0	30	2	DRYER	36
37	SPARE	1	20	0.0			1.0			--	--	--	38
39	SPARE	1	20		0.0			0.2		20	1	WASHER	40
41	SPARE	1	20			0.0			0.0	20	1	SPARE	42
43	SPARE	1	20	0.0			0.0			20	1	SPARE	44
45	SPARE	1	20		0.0			0.0		20	1	SPARE	46
47	SPARE	1	20			0.0			0.0	20	1	SPARE	48
49	SPACE WITH PROVISIONS	--	--	0.0			0.0			--	--	SPACE WITH PROVISIONS	50
51	SPACE WITH PROVISIONS	--	--		0.0			0.0		--	--	SPACE WITH PROVISIONS	52
53	SPACE WITH PROVISIONS	--	--			0.0			0.0	--	--	SPACE WITH PROVISIONS	54
55	SPACE WITH PROVISIONS	--	--	0.0			0.0			--	--	SPACE WITH PROVISIONS	56
57	SPACE WITH PROVISIONS	--	--		0.0			0.0		--	--	SPACE WITH PROVISIONS	58
59	SPACE WITH PROVISIONS	--	--			0.0			0.0	--	--	SPACE WITH PROVISIONS	60
		TOTAL:	PHASE A:	13.2		PHASE B:	10.1		PHASE C:	9.6			
		TOTAL CONNECTED:				32.9 kVA			91.3 A				
		TOTAL DEMAND:				30.8 kVA			85.4 A				

LIGHTING FIXTURE SCHEDULE

FIXTURE TYPE	MOUNTING	MANUFACTURER(S)	CATALOG OR MODEL NUMBER	LAMPS (NOTE 5)	VOLTS	REMARKS
A1	CEILING RECESSED	METALUX, COLUMBIA, LITHONIA, LIGHTOLIER	2GC8-232A125-UNV-ER81	TWO F32T8/ADV835/ALTO	120	2X4 STATIC GRID LENSED TROFFER, MAX 5" DEEP, 90% REFLECTANCE. WHITE COLD ROLLED STEEL HOUSING, FLAT WHITE STEEL DOOR, ACRYLIC PRISMATIC PATTERN 12 LENS 0.125" THICK, ONE 2-LAMP PROGRAMMED START ELECTRONIC BALLAST. PROVIDE APPROPRIATE TRIM TO ACCOMMODATE DIFFERENT CEILING TYPES IN FIELD.
A1E	CEILING RECESSED	METALUX, COLUMBIA, LITHONIA, LIGHTOLIER	2GC8-232A125-UNV-EL-ER81	TWO F32T8/ADV835/ALTO	120	2X4 STATIC GRID LENSED TROFFER, MAX 5" DEEP, 90% REFLECTANCE. WHITE COLD ROLLED STEEL HOUSING, FLAT WHITE STEEL DOOR, ACRYLIC PRISMATIC PATTERN 12 LENS 0.125" THICK, INTEGRAL EMERGENCY BATTERY PACK, ONE 2-LAMP PROGRAMMED START ELECTRONIC BALLAST. PROVIDE APPROPRIATE TRIM TO ACCOMMODATE DIFFERENT CEILING TYPES IN FIELD.
B1	CEILING SUSPENDED	METALUX, COLUMBIA, LITHONIA, LIGHTOLIER	DMF-232-UNV-ER81	TWO F32T8/ADV835/ALTO	120	INDUSTRIAL FIXTURE, 48" LONG BY 13.5" WIDE BY 6" DEEP, 20% UPLIGHT APERTURED REFLECTOR, COLD ROLLED STEEL HOUSING, ONE 2-LAMP PROGRAMMED START ELECTRONIC BALLAST. MOUNT 10' AFF
B1E	CEILING SUSPENDED	METALUX, COLUMBIA, LITHONIA, LIGHTOLIER	DMF-232-UNV-EL4-ER81	TWO F32T8/ADV835/ALTO	120	INDUSTRIAL FIXTURE, 48" LONG BY 13.5" WIDE BY 6" DEEP, 20% UPLIGHT APERTURED REFLECTOR, COLD ROLLED STEEL HOUSING, INTEGRAL EMERGENCY BATTERY PACK, ONE 2-LAMP PROGRAMMED START ELECTRONIC BALLAST. MOUNT 10' AFF
C1	WALL SURFACE	LITHONIA, COOPER LIGHTING, HUBBELL LIGHTING	MRWLED-2-10A700/40K-SR3-120-ELCW-PE-WG-DDBXD	LED (INCLUDED)	120	EXTERIOR WALL MOUNTED LED FIXTURE, 4000K, PHOTOCELL, INTEGRAL EMERGENCY BATTERY PACK, WIREGUARD, DIE CAST ALUMINUM HOUSING, WET LOCATION LISTED, DARK BRONZE FINISH.
D1	CEILING PENDANT	LITHONIA, COOPER LIGHTING, HUBBELL LIGHTING	TRLOC15-72LED220MA-41K-SYM-120-PDM-FG-DDB	LED (INCLUDED)	120	EXTERIOR ROUND PENDANT MOUNTED LED FIXTURE, 4100K, FOWL GUARD, DIE CAST ALUMINUM HOUSING, DARK BRONZE FINISH, WET LOCATION LISTED. MOUNT 8' AFF.
X	WALL SURFACE	LITHONIA, COOPER LIGHTING, HUBBELL LIGHTING	LX-W-3-R-ELN	LED (INCLUDED)	120	EXIT SIGN, WALL OR CEILING MOUNT, CHEVRONS AND FACES AS INDICATED ON DRAWINGS, RED LETTERS, WHITE STEEL HOUSING.

LIGHTING FIXTURE SCHDULE NOTES:

1. LISTED CATALOG NUMBER IS FOR FIRST NAMED MANUFACTURER. THIS MANUFACTURER AND FIXTURE CONSTITUTES THE "BASIS OF DESIGN". LISTING OF ALTERNATE MANUFACTURER'S NAMES DOES NOT IMPLY ACCEPTANCE OF THEIR STANDARD PRODUCT. MANUFACTURERS ARE RESPONSIBLE FOR PROVIDING FIXTURES THAT ARE EQUAL IN ALL RESPECTS TO THE "BASIS OF DESIGN" FIXTURE.
2. SUBSTITUTIONS OF FIXTURES PROVIDED BY MANUFACTURERS NOT USED IN THE SCHEDULE ARE NOT ACCEPTABLE.
3. LIGHTING FIXTURE SUBMITTALS SHALL INCLUDE, AS A MINIMUM:
   - -FIXTURE TYPE, DIMENSIONS, & FINISH
   - -LAMP DATA FOR EACH FIXTURE TYPE; INCLUDING TYPE, QUANTITY, WATTAGE & PHOSPHOR COLOR
   - -BALLAST DATA FOR EACH FIXTURE TYPE & FIXTURE VOLTAGE
4. VERIFY FIXTURE VOLTAGES & CEILING TRIM COMPATIBILITY PRIOR TO ORDERING FIXTURES.
5. LAMPS SHALL BE PHILIPS OR APPROVED EQUAL BY GE OR SYLVANIA.
6. PROVIDE EXTENDED PERFORMANCE TYPE LAMPS FOR ALL LINEAR T8 LAMPS PER SCHEDULE.
7. ALL FLUORESCENT BALLASTS SHALL BE PROGRAMMED ELECTRONIC TYPE, IN ACCORDANCE WITH THE REQUIREMENTS OF SPECIFICATION.

MECHANICAL EQUIPMENT CONNECTION SCHEDULE

SERVED FROM	SERVING	LOAD HP	LOAD KVA	LOAD AMPS	VOLTS	PH	LOCAL DISCONNECT DEVICE	LOCAL DISCONNECT SIZE	CONTROLLER DISCONNECT DEVICE	CONTROLLER DISCONNECT SIZE	CONTROLLER TYPE	CONTROLLER NEMA SIZE	CIRCUIT WIRE	CIRCUIT GND	CIRCUIT C**	REMARKS
MDP	AC-1	1	5.0	13.8	208	3	FSS	30	-	-	-	-	3#10	1#10	3/4	NOTE 1
MDP	AHU-1	-	13.7	37.9	208	3	FSS	60	-	-	-	-	3#6	1#10	1	NOTE 3
RP	EF-1	0.25	0.7	5.8	120	1	-	-	MMS	-	FVNR	-	2#12	1#12	3/4	NOTE 2
RP	EF-2	0.25	0.7	5.8	120	1	-	-	MMS	-	FVNR	-	2#12	1#12	3/4	NOTE 2
RP	EF-3	0.25	0.7	5.8	120	1	-	-	MMS	-	FVNR	-	2#12	1#12	3/4	NOTE 2
RP	EF-4	0.75	1.7	13.8	120	1	-	-	MMS	-	FVNR	-	2#12	1#12	3/4	NOTE 2
RP	EF-5	0.75	1.7	13.8	120	1	-	-	MMS	-	FVNR	-	2#12	1#12	3/4	NOTE 2
RP	EF-6	0.25	0.7	5.8	120	1	-	-	MMS	-	FVNR	-	2#12	1#12	3/4	NOTE 2
RP	FTR-1	-	0.5	4.2	120	1	SW	-	-	-	-	-	2#12	1#12	3/4	
RP	FTR-1	-	0.5	4.2	120	1	SW	-	-	-	-	-	2#12	1#12	3/4	
RP	FTR-1	-	0.5	4.2	120	1	SW	-	-	-	-	-	2#12	1#12	3/4	
RP	FTR-1	-	0.5	4.2	120	1	SW	-	-	-	-	-	2#12	1#12	3/4	
RP	FTR-1	-	0.5	4.2	120	1	SW	-	-	-	-	-	2#12	1#12	3/4	

MECHANICAL EQUIPMENT CONNECTION SCHEDULE NOTES:

1 THREE 1HP MOTORS. PROVIDE 600V HEAVY DUTY FSS IN NEMA 1 ENCLOSURE. PROVIDE FUSES AS REQUIRED BY THE MANUFACTURER.

2 PROVIDE MANUAL MOTOR STARTER WITH HAND-OFF-AUTO SWITCH IN NEMA 1 ENCLOSURE.

3 PROVIDE 600V HEAVY DUTY FUSED SAFETY SWITCH IN NEMA 4X ENCLOSURE. PROVIDE FUSES AS REQUIRED BY THE MANUFACTURER.

QUINN EVANS ARCHITECTS

2121 WARD PLACE, NW
FOURTH FLOOR
WASHINGTON, DC 20007

v 202 298 6700
f 202 298 6666

WWW.QUINNEVANS.COM

Mueller

Mueller Associates, Inc.
Consulting Engineers
1401 S. Edgewood Street
Baltimore, Maryland 21227
410.646.4500 tel > 410.646.4738 fax
www.muellerassoc.com

FERRY FARM PHASE 1 IMPROVEMENTS M&O BUILDING

268 Kings Hwy, Fredericksburg, VA 22405

QEA # 31402900

SCHEDULES

COMMONWEALTH OF VIRGINIA
KENNETH H. ROCK
Lic. No. 085558
6/30/15
PROFESSIONAL ENGINEER

BUILDING PERMIT SUBMISSION
06/30/15

REVISIONS

NO.	DESCRIPTION	DATE

E-400

6/29/2015 10:04:38 AM C:\Users\rock\Desktop\Revit Local Files\131170\ (RVT 2014)\Ferry Farm M&O Building MEP Central_jack.rvt

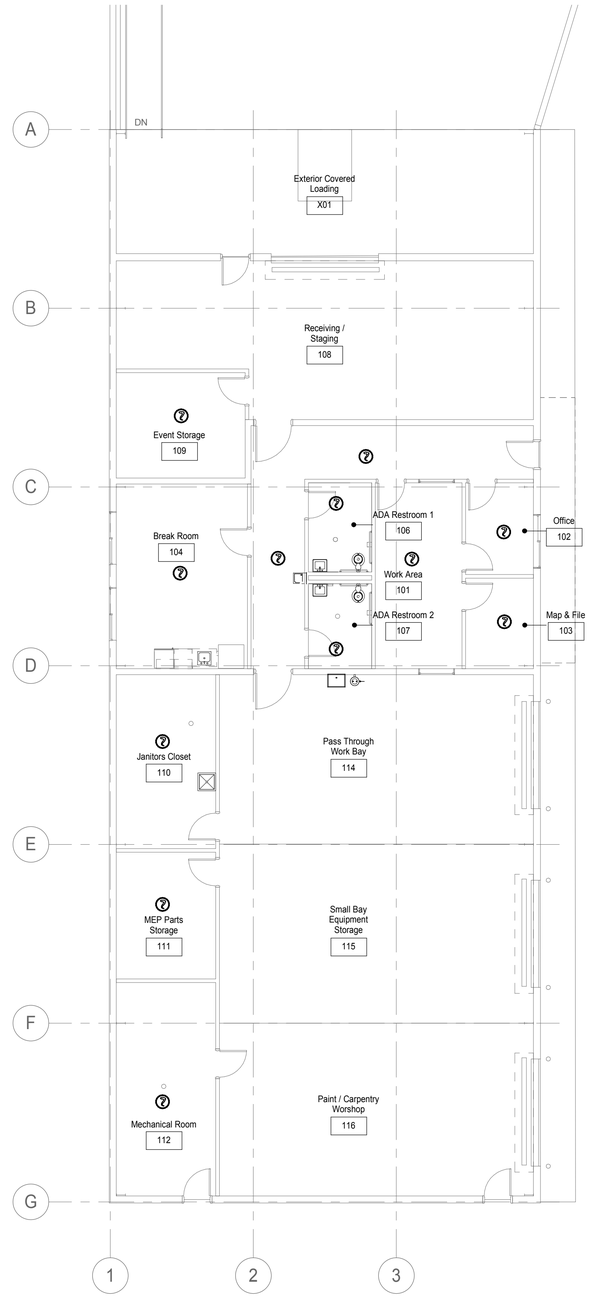

1 / E-300 FIRST FLOOR PLAN - SMOKE DETECTOR
1/8" = 1'-0"

PROJECT NORTH

IF DRAWING IS REDUCED, USE GRAPHIC SCALE
5' 0' 5' 10'
1/8" = 1'-0"

QUINN EVANS ARCHITECTS

2121 WARD PLACE, NW
FOURTH FLOOR
WASHINGTON, DC 20007

v 202 298 6700
f 202 298 6666

WWW.QUINNEVANS.COM

Mueller

Mueller Associates, Inc.
Consulting Engineers
1401 S. Edgewood Street
Baltimore, Maryland 21227
410.646.4500 tel > 410.646.4738 fax
www.muellerassoc.com

FERRY FARM PHASE 1 IMPROVEMENTS M&O BUILDING

268 Kings Hwy, Fredericksburg, VA 22405

QEA # 31402900

FIRST FLOOR PLAN - SMOKE DETECTOR

COMMONWEALTH OF VIRGINIA
KENNETH H. ROCK
Lic. No. 085558
6/30/15
PROFESSIONAL ENGINEER

BUILDING PERMIT SUBMISSION
06/30/15

REVISIONS

NO.	DESCRIPTION	DATE

E-300

6/25/2015 10:04:35 AM C:\Users\pcc\Desktop\Revit Local Files\131701 (RVT 2014)Ferry Farm M&O Building MEP Central_pcc.rvt

DRAWING NOTES:

1 REFER TO DETAILS 2/E-200 AND 3/E-200 FOR ADDITIONAL WIRING REQUIREMENTS.

2 COORDINATE EXACT QUANTITY OF LIGHTING FIXTURES IN EACH SPACE WITH OWNER.

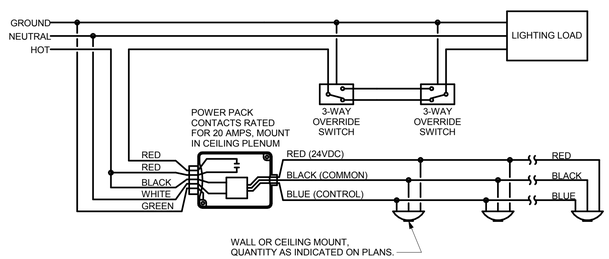

2 E-200 OCCUPANCY SENSOR W/ 3-WAY SWITCH OVERRIDE
NOT TO SCALE

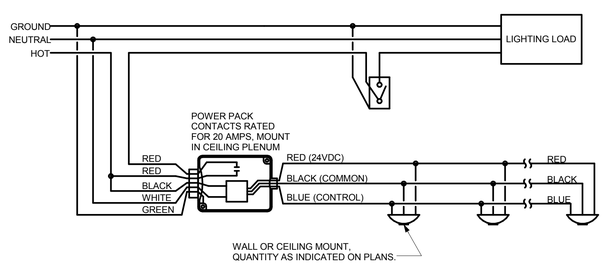

3 E-200 OCCUPANCY SENSOR W/ SWITCH OVERRIDE
NOT TO SCALE

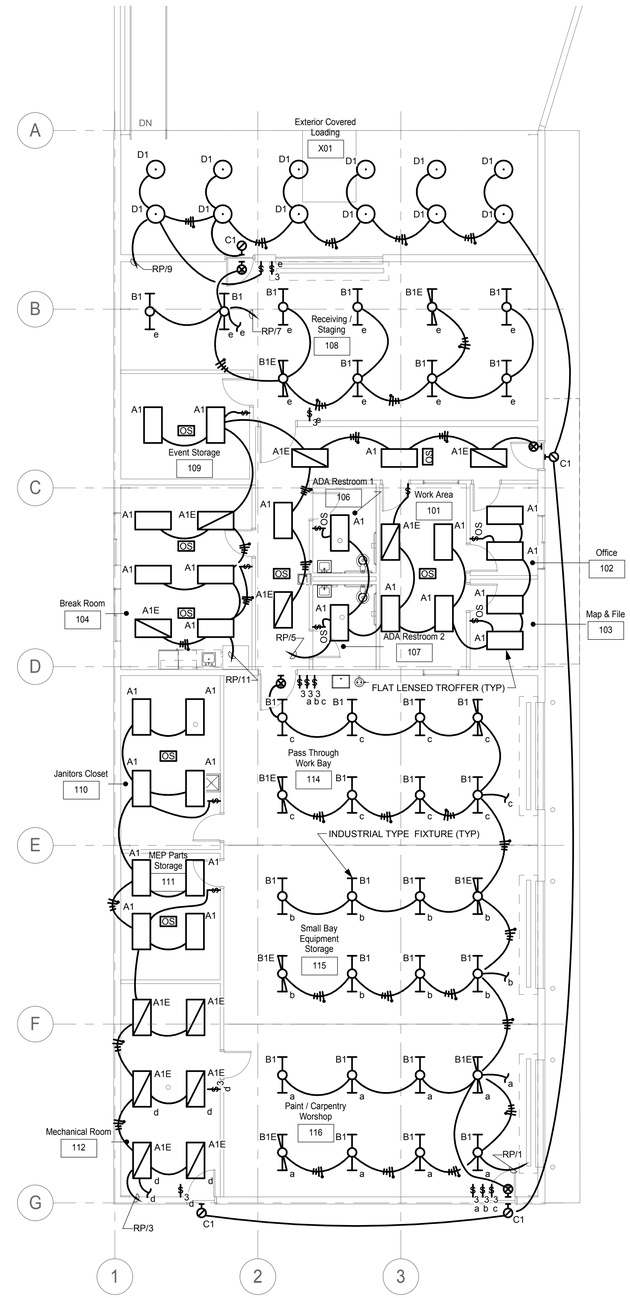

1 E-200 FIRST FLOOR PLAN - LIGHTING
1/8" = 1'-0"

PROJECT NORTH

IF DRAWING IS REDUCED, USE GRAPHIC SCALE
5' 0' 5' 10'
1/8" = 1'-0"

QUINN EVANS ARCHITECTS

2121 WARD PLACE, NW
FOURTH FLOOR
WASHINGTON, DC 20007

v 202 298 6700
f 202 298 6666

WWW.QUINNEVANS.COM

Mueller

Mueller Associates, Inc.
Consulting Engineers
1401 S. Edgewood Street
Baltimore, Maryland 21227
410.646.4500 tel > 410.646.4738 fax
www.muellerassoc.com

FERRY FARM PHASE 1 IMPROVEMENTS M&O BUILDING

268 Kings Hwy, Fredericksburg, VA 22405

QEA # 31402900

FIRST FLOOR PLAN - LIGHTING

COMMONWEALTH OF VIRGINIA
KENNETH H. ROCK
Lic. No. 085558
6/30/15
PROFESSIONAL ENGINEER

BUILDING PERMIT SUBMISSION
06/30/15

REVISIONS

NO.	DESCRIPTION	DATE

E-200

C:\Users\pcc\Desktop\Revit Local Files\131701 (RVT 2014)\Ferry Farm M&O Building MEP Central_pcc.rvt
6/25/2015 10:04:35 AM

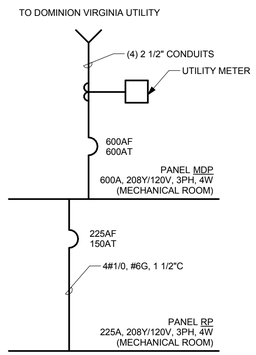

2 E-100 ONE LINE DIAGRAM
1/8" = 1'-0"

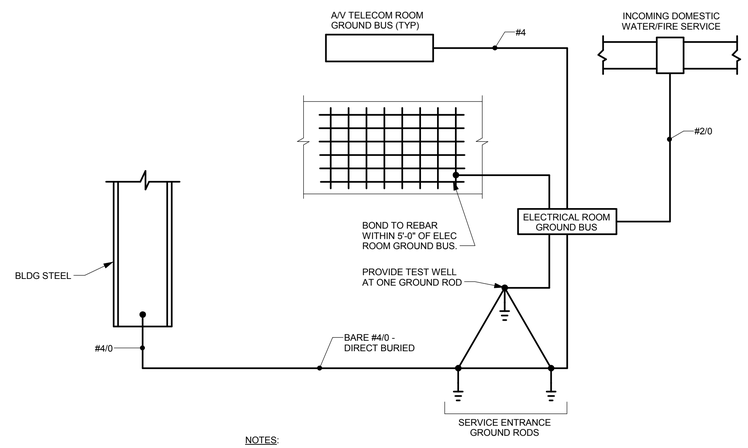

NOTES:

1 SPACE GROUNDING TRIAD RODS AT LEAST 10 FEET FROM EACH OTHER.

2 COORDINATE EXACT LOCATION OFR GOUNDING TRIAD, GROUNDING BUS AND ALL GROUNDING CONNECTIONS SHOWN ON THIS DIAGRAMS WITH OWNER IN FIELD.

3 E-100 GROUND RISER DIAGRAM
1/8" = 1'-0"

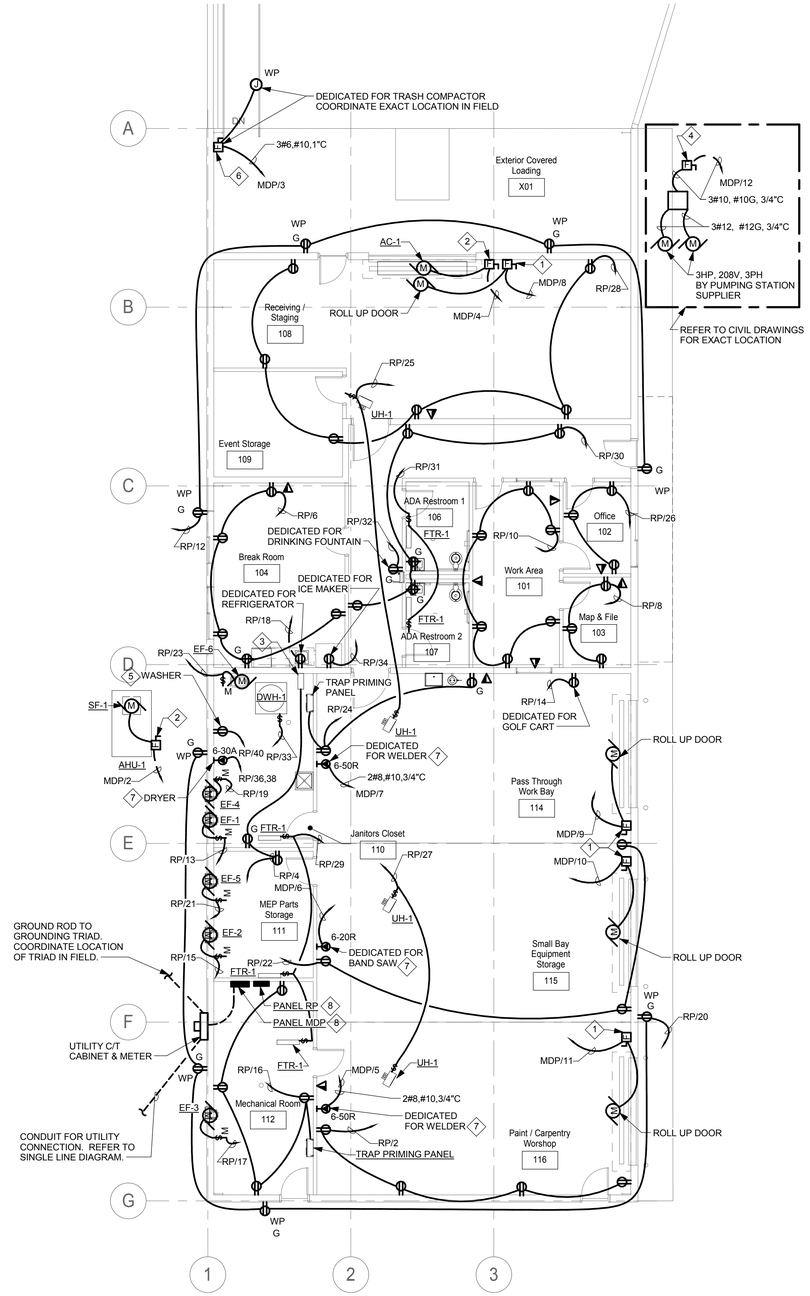

1 E-100 FIRST FLOOR PLAN - POWER
1/8" = 1'-0"

SPECIAL NOTES:

1 PROVIDE 600V, 30A HEAVY DUTY SAFETY SWITCH IN NEMA 1 ENCLOSURE. FUSE PER MANUFACTURER'S RECOMMENDATIONS.

2 REFER TO MECHANICAL EQUIPMENT CONNECTION SCHEDULE.

3 RECIRCULATION PUMP.

4 PROVIDE 600V, 30A HEAVY DUTY SAFETY SWITCH IN NEMA 4X ENCLOSURE. FUSE PER MANUFACTURER'S RECOMMENDATIONS.

5 COORDINATE EXACT LOCATION IN FIELD. TO SUIT EQUIPMENT.

6 PROVIDE 600V, 60A HEAVY DUTY SAFETY SWITCH IN NEMA 4X ENCLOSURE. FUSE PER MANUFACTURER'S RECOMMENDATIONS.

7 PROVIDE 250V, 2-POLE, THREE WIRE GROUNDING RECEPTACLE. COORDINATE EXACT RECEPTACLE CONFIGURATION REQUIRED WITH OWNER. COORDINATE EXACT LOCATION IN FIELD. TO SUIT EQUIPMENT.

8 COORDINATE EXACT LOCATION IN FIELD TO MAINTAIN NEC REQUIRED WORKING CLEARANCES AND DEDICATED SPACE.

PROJECT NORTH

IF DRAWING IS REDUCED, USE GRAPHIC SCALE
5' 0' 5' 10'
1/8" = 1'-0"

QUINN EVANS ARCHITECTS

2121 WARD PLACE, NW
FOURTH FLOOR
WASHINGTON, DC 20007

v 202 298 6700
f 202 298 6666

WWW.QUINNEVANS.COM

Mueller

Mueller Associates, Inc.
Consulting Engineers
1401 S. Edgewood Street
Baltimore, Maryland 21227
410.646.4500 tel > 410.646.4738 fax
www.muellerassoc.com

FERRY FARM PHASE 1 IMPROVEMENTS M&O BUILDING

268 Kings Hwy, Fredericksburg, VA 22405

QEA # 31402900

FIRST FLOOR PLAN - POWER

COMMONWEALTH OF VIRGINIA
KENNETH H. ROCK
Lic. No. 086558
6/30/15
PROFESSIONAL ENGINEER

BUILDING PERMIT SUBMISSION
06/30/15

REVISIONS

NO.	DESCRIPTION	DATE

E-100

6/29/2015 10:04:34 AM C:\Users\rock\Desktop\Revit Local Files\131701 (RVT 2014)\Ferry Farm M&O Building MEP Central_jack.rvt

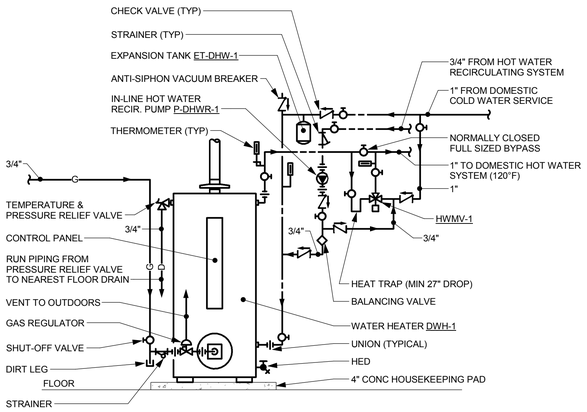

1 / P-500 DETAIL - GAS FIRED WATER HEATER
NOT TO SCALE

GAS FIRED STORAGE DOMESTIC WATER HEATER

DESIG	LOCATION	TANK STORAGE SIZE (GAL)	FLUE SIZE (IN) (INLET/OUTLET)	RECOVERY RATE (GPH) 100° RISE	BTU/HOUR INPUT	MAX GAS INLET PRESSURE (IN W.C.)	VOLTS/PHASES/HZ	REMARKS
DWH-1	JANITOR CLOSET	65	4	60	65,000	14	120V/1/60	NOTE 1

NOTES

1. BASIS OF DESIGN: A.O. SMITH MODEL BT-65

PLUMBING FIXTURE SCHEDULE

DESIG	DESCRIPTION	FIXTURE UNITS		ROUGH-IN CONNECTION (IN)				REMARKS	BASIS OF DESIGN
		WASTE	WATER	SAN	VENT	CW	HW		
P-1	WATER CLOSET	4	10	4"	2"	1"		FLOOR MOUNTED, BARRIER FREE, 1.28 GPF	AMERICAN STANDARD MODEL 3461.528
P-2	LAVATORY	2	2	1 1/2"	1 1/2"	1/2"	1/2"	WALL MOUNTED, BARRIER FREE, 0.5 GPM FAUCET	FIXTURE: AMERICAN STANDARD MODEL 0356.421; FAUCET: TOTO MODEL TEL5LS10#CP
P-3	BREAK ROOM SINK	2	2	1 1/2"	1 1/2"	1/2"	1/2"	STAINLESS STEEL COUNTER MOUNTED	FIXTURE: JUST MODEL SL-ADA-1921-1-GR; FAUCET: CHICAGO 2300-8E34ABCP
P-4	UTILITY SINK	2	2	1 1/2"	1 1/2"	1/2"	1/2"	FREE-STANDING	FIXTURE: FIAT MODEL FL-1; FAUCET CHICAGO 526-E3ABCP
P-5	MOP SINK	3	3	3"	1 1/2"	3/4"	3/4"	FLOOR MOUNTED	FIXTURE: FIAT MODEL MSB-2424; FAUCET: CHICAGO 540-LD-897S-WXFABCP
P-6	EMERGENCY EYEWASH	0	0	1 1/2"	1 1/2"	1/2"	1/2"	WALL MOUNTED, NOTE 1	HAWS MODEL 7260
P-7	DRINKING FOUNTAIN	0.5	0.25	1 1/2"	1 1/2"	1/2"	0"	WALL MOUNTED, BARRIER FREE	HAWS MODEL 1109
P-8	OUTLET BOX FOR REFRIGERATOR	0	0.25	0"	0"	1/2"	0"	NOTE 2	OATEY MODEL 39141
P-9	OUTLET BOX FOR ICE MAKER	0	0.25	0"	0"	1/2"	0"	NOTE 2	OATEY MODEL 39141
P-10	OUTLET BOX FOR WASHING MACHINE	2	1.4	2"	1 1/2"	1/2"	1/2"	NOTE 3	OATEY MODEL 38993

NOTES:

1. PROVIDE WITH ASSE 1071 THERMOSTATIC MIXING VALVE TO PROVIDE TEPID WATER PER ANSI Z 358.1 STANDARDS.
2. PROVIDE WITH ASSE 1024 INLINE DUAL CHECK BACKFLOW PREVENTER.
3. PROVIDE OUTLET BOX WITH DEDICATED CW AND HW HOSE BIBBS WITH INTEGRAL VACUUM BREAKERS AND 2" DIAMETER STANDPIPE

HOT WATER MIXING VALVES

DESIG	LOCATION	SERVICE	GPM	HOT WATER TEMP. (°F)	MAX. PRESSURE DROP (PSI)	REMARKS	BASIS OF DESIGN
HWMV-1	JANITORS CLOSET	DOMESTIC HOT WATER	2	120	5	ASSE 1017	WATTS LFN170
HWMV-2	LAVATORY	DOMESTIC HOT WATER	0.5	110	5	ASSE 1070	WATTS LFMMV
HWMV-3	EMERGENCY EYEWASH	TEPID WATER	3	85	10	ASSE 1071	LEONARD TA-300-LF

PLUMBING EXPANSION TANK

DESIG	LOCATION	SERVICE	ACCEPTANCE VOLUME (GALLONS)	FILL PRESSURE (PSIG)	RELIEF VALVE SETTING (PSIG)	TANK VOLUME (GALLONS)	REMARKS
ET-DWH-1	JANITORS CLOSET	DOMESTIC HOT WATER	1.0	60	80	4.7	B.O.D. BELL & GOSSETT MODEL PTA-12

PUMPS

DESIG	TYPE (SEE SPEC)	LOCATION	SERVICE	WATER FLOWRATE (GPM)	HEAD (FT HD)	SPEED (RPM)	MOTOR WATTS	ELECTRICAL			BASIS OF DESIGN
								VOLTS	PH	HZ	
P-HWRP-1	INLINE	JANITOR CLOSET	DOMESTIC HOT WATER	1.0	5.0	2800	39	120 V	1	60	BELL & GOSSETT MODEL NBF-8S

QUINN EVANS ARCHITECTS

2121 WARD PLACE, NW
FOURTH FLOOR
WASHINGTON, DC 20007

v 202 298 6700
f 202 298 6666

WWW.QUINNEVANS.COM

Mueller

Mueller Associates, Inc.
Consulting Engineers
1401 S. Edgewood Street
Baltimore, Maryland 21227
410.646.4500 tel > 410.646.4738 fax
www.muellerassoc.com

FERRY FARM PHASE 1 IMPROVEMENTS M&O BUILDING

268 Kings Hwy, Fredericksburg, VA 22405

QEA # 31402900

SCHEDULES & DETAILS

COMMONWEALTH OF VIRGINIA
C. DANIEL CARMINE
Lic. No. 046419
PROFESSIONAL ENGINEER
6/30/15

BUILDING PERMIT SUBMISSION
06/30/15

REVISIONS

NO.	DESCRIPTION	DATE

P-500

6/24/2015 5:26:59 PM C:\Users\wei\Documents\Ferry Farm M&O Building MEP Central_kets.rvt

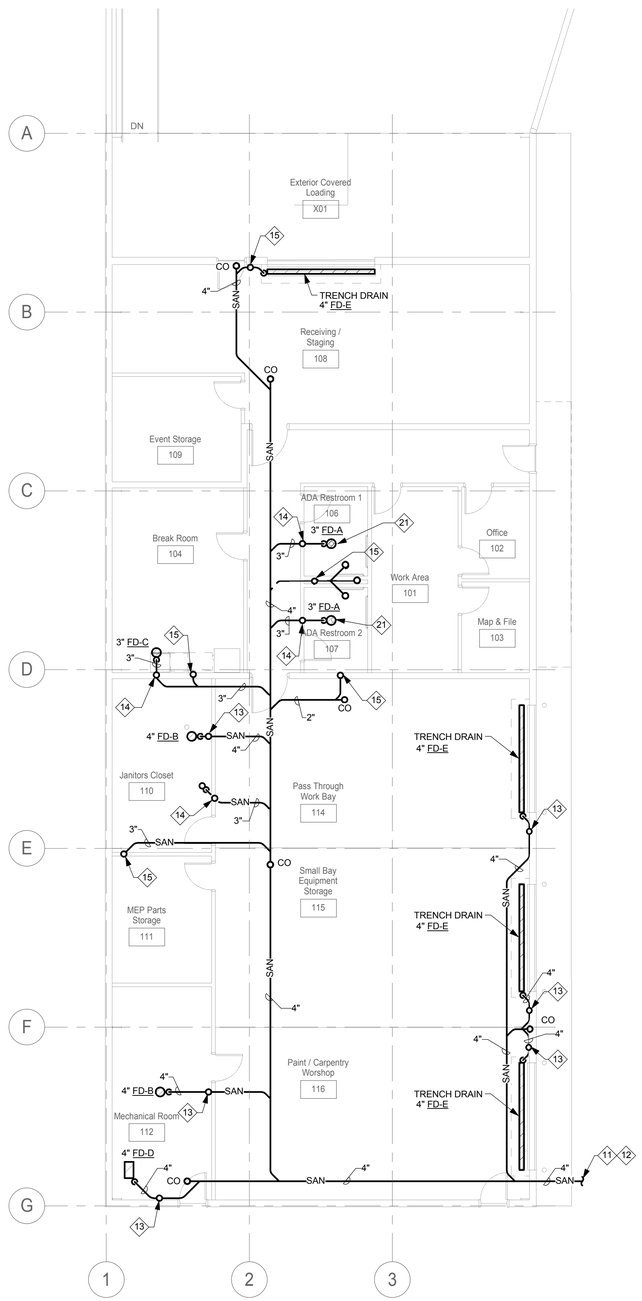

2 P-100 FOUNDATION PLAN - PLUMBING

1/8" = 1'-0"

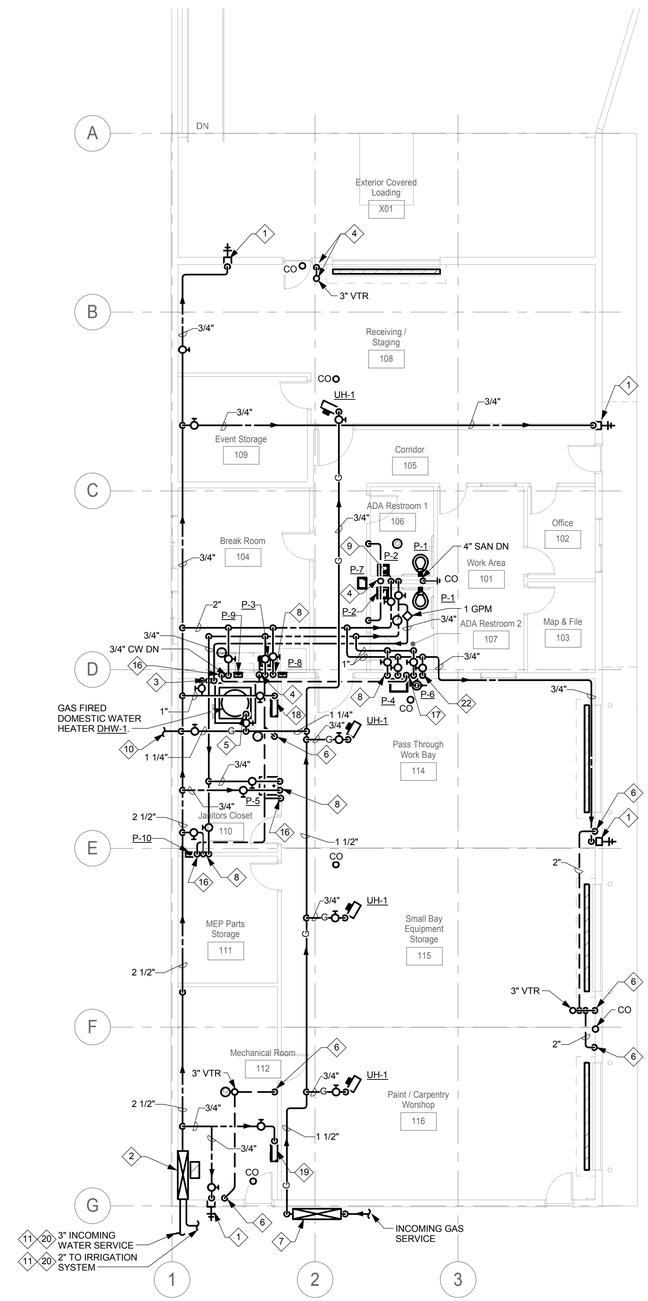

1 P-100 FIRST FLOOR PLAN - PLUMBING

1/8" = 1'-0"

DRAWING NOTES:

A. REFER TO DRAWING M-001 FOR ABBREVIATIONS, SYMBOLS AND CONVENTIONS.

B. REFER TO CIVIL DRAWINGS FOR SITE PLAN INFORMATION PERTAINING TO DOMESTIC POTABLE WATER, SANITARY SEWER AND STORM WATER SYSTEMS.

C. REFER TO ARCHITECTURAL PLANS FOR CLEAR FLOOR SPACE REQUIREMENTS, ELEVATIONS DETAILS AND DIMENSIONS FOR ALL HANDICAP ACCESSIBLE PLUMBING FIXTURES.

D. DOMESTIC WATER (COLD, HOT AND RECIRCULATION) PIPING SHALL BE HARD COPPER TUBE, TYPE L, ASTM B 88, WITH LEAD FREE SOLDER JOINT FITTINGS. ALL PIPING, VALVES AND OTHER COMPONENTS INSTALLED IN THE POTABLE WATER SYSTEM INTENDED FOR HUMAN CONSUMPTION SHALL COMPLY WITH NSF 61 ANNEX G OR NSF 372.

E. BELOW SLAB SANITARY WASTE PIPING SHALL BE SERVICE CLASS, CAST IRON SOIL PIPING, GASKETS AND GASKETED JOINTS. ABOVE SLAB SANITARY WASTE AND VENT PIPING SHALL BE SERVICE CLASS, HUBLESS, CAST IRON SOIL PIPING WITH HEAVY DUTY, TYPE 304 STAINLESS STEEL COUPLINGS. ALL CAST IRON PIPING AND FITTINGS ARE TO BE PRODUCED BY A SINGLE MANUFACTURER AND SHALL BE MARKED WITH THE COLLECTIVE TRADEMARK OF THE CAST IRON SOIL PIPE INSTITUTE (CISPI).

F. NATURAL GAS PIPING SHALL BE BLACK STEEL, ASTM A53, GRADE B, SCHEDULE 40 WITH BLACK MALLEABLE IRON SCREWED FITTINGS, ANSI B16.5, CLASS 150. JOINTS SHALL BE AMERICAN STANDARD FOR PIPE THREADS ANSI B1.20.1.

G. DOMESTIC WATER SHUT-OFF VALVES 2-INCH AND SMALLER SHALL BE BALL VALVES, TWO-PIECE DESIGN SUITABLE FOR 250 PSIG WATER. VALVES SHALL COMPRISE OF ASTM B254 BRONZE BODY WITH THREADED END CONNECTIONS, FULL PORT CHROMED PLATED BALL. STEM SHALL BE BLOW-OUT PROOF. VALVE SHALL BE EQUIPPED WITH VINYL COVERED LEVER HANDLE WHICH INDICATES POSITION OF BALL ORIFICE AND SHALL HAVE STOPS FOR FULLY OPEN AND CLOSED POSITION.

H. NATURAL GAS SHUT-OFF VALVES SHALL BE TWO-PIECE DESIGN SUITABLE FOR PRESSURES UP TO 150 PSIG. VALVES SHALL BE COMPRISED OF ASTM A216, CAST CARBON STEEL BODY WITH THREADED ENDS, 316 STAINLESS STEEL STANDARD PORT VENTED BALL, STAINLESS STEEL STEM, REINFORCED TEFLON SEAT AND THRUST WASHER, TEFLON BODY SEAL AND THREADED HEXAGONAL GLAND FOLLOWER.

◇ SPECIAL NOTES:

1 3/4" CW DOWN IN WALL TO FREEZE PROOF WALL HYDRANT.

2 INCOMING WATER SERVICE REFER TO DOMESTIC WATER RISER DIAGRAM ON DRAWING P-501.

3 1" CW, 1" HW & 3/4" HWR DN REFER TO DOMESTIC WATER HEATER DETAIL.

4 2" VENT PIPE DOWN AND 2" UP TO 3" VTR. TRANSITION TO 3" VP 12" BELOW ROOF.

5 3/4" GAS DOWN TO DOMESTIC WATER HEATER.

6 2" VP DOWN

7 GAS SERVICE ENTRANCE ASSEMBLY.

8 3/4" CW & 3/4" HW DOWN.

9 2" CW & 3/4" HW DN.

10 1 1/4" GAS TO AHU-1.

11 FOR CONTINUATION REFER TO CIVIL DRAWINGS.

12 INVERT ELEVATION SHALL BE SUCH THAT TOP OF PIPE SHALL HAVE MINIMUM 36" COVER TO TOP OF GRADE.

13 2" VENT PIPE UP

14 1 1/2" VENT PIPE UP

15 2" SAN UP

16 1 1/2" VP DOWN

17 2" SAN-VP DOWN

18 3/4" CW DOWN TO TRAP PRIMING PANEL. EXTEND DEDICATED TRAP PRIMING LINES TO FLOOR/TRENCH DRAINS IN JANITOR CLOSET, BREAK ROOM AND WORK BAY 114.

19 3/4" CW DOWN TO TRAP PRIMING PANEL. EXTEND DEDICATED TRAP PRIMING LINES TO FLOOR/TRENCH DRAINS IN MECHANICAL ROOM, STORAGE 115 AND WORKSHOP 116.

20 TOP OF PIPE SHALL HAVE MINIMUM 48" COVER TO TOP OF GRADE.

21 PROVIDE TRAP PRIMING CONNECTION FED FROM NEAREST WATER CLOSET FLUSH VALVE.

22 3/4" CW AND 3/4" HW DOWN TO HWMV-3 IN RECESSED MOUNTED CABINET. EXTEND TEPID WATER TO EMERGENCY EYEWASH.

PROJECT NORTH

IF DRAWING IS REDUCED, USE GRAPHIC SCALE

5' 0' 5' 10'

1/8" = 1'-0"

QUINN EVANS ARCHITECTS

2121 WARD PLACE, NW
FOURTH FLOOR
WASHINGTON, DC 20007

v 202 298 6700
f 202 298 6666

WWW.QUINNEVANS.COM

Mueller

Mueller Associates, Inc.
Consulting Engineers
1401 S. Edgewood Street
Baltimore, Maryland 21227
410.646.4500 tel > 410.646.4738 fax
www.muellerassoc.com

FERRY FARM PHASE 1 IMPROVEMENTS M&O BUILDING

268 Kings Hwy, Fredericksburg, VA 22405

QEA # 31402900

FIRST FLOOR - PLUMBING

COMMONWEALTH OF VIRGINIA
DANIEL CARMINE
Lic. No. 040419
PROFESSIONAL ENGINEER
6/30/15

BUILDING PERMIT SUBMISSION
06/30/15

REVISIONS

NO.	DESCRIPTION	DATE

P-100

6/24/2015 5:28:54 PM C:\Users\kevi\Documents\Ferry Farm M&O Building_MEP Central_kevi.rvt

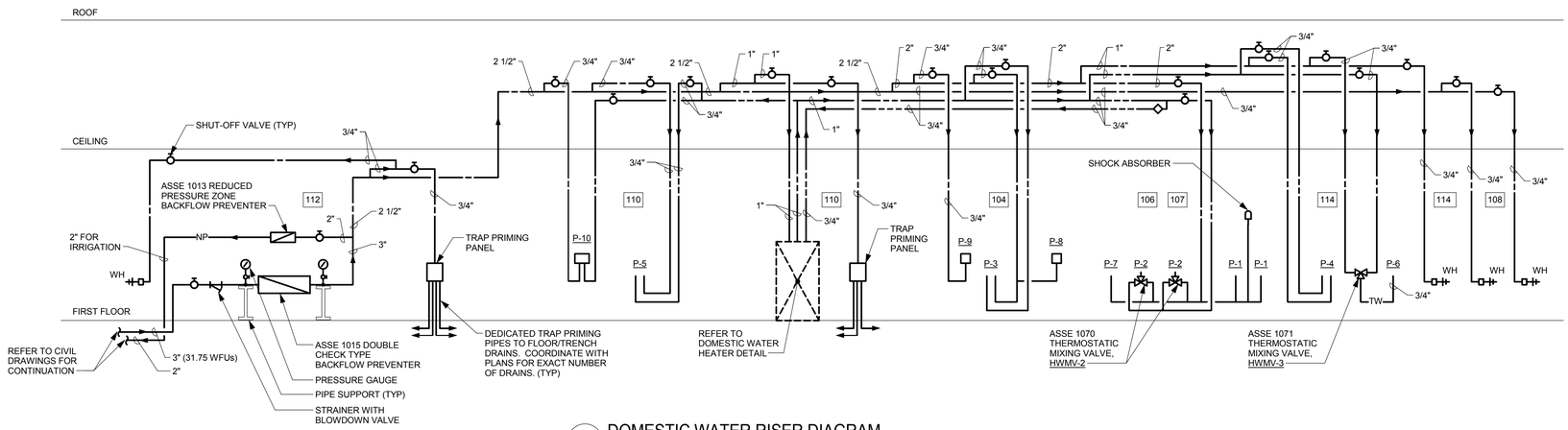

1 P-501 DOMESTIC WATER RISER DIAGRAM
NOT TO SCALE

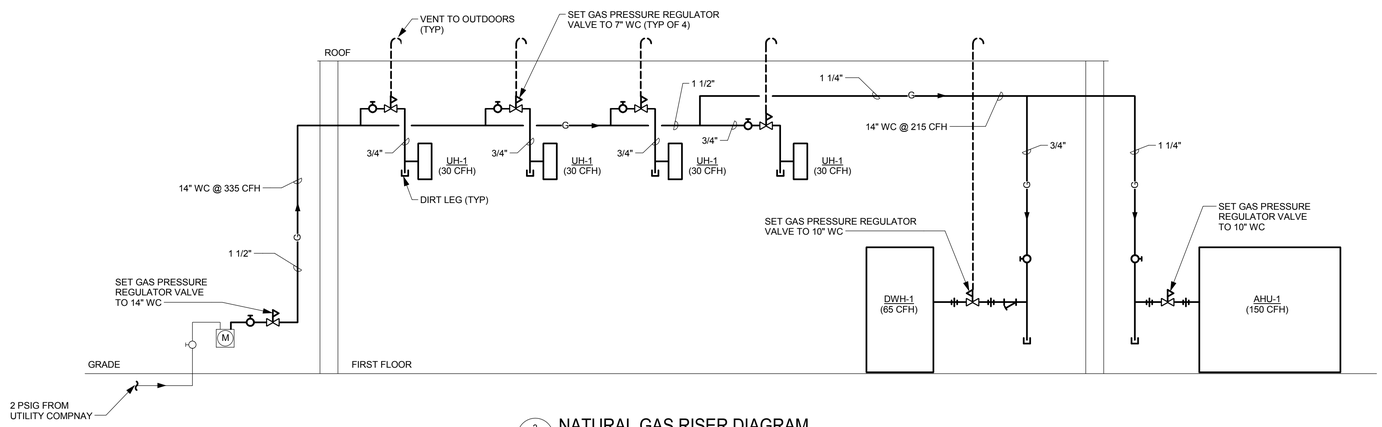

2 P-501 NATURAL GAS RISER DIAGRAM
NOT TO SCALE

NOTES:

1. PIPE SIZING IS BASED ON THE LONGEST LENGTH METHOD AND 0.5 IN WC ALLOWABLE PRESSURE DROP.
2. NATURAL GAS SPECIFIC GRAVITY: 0.60

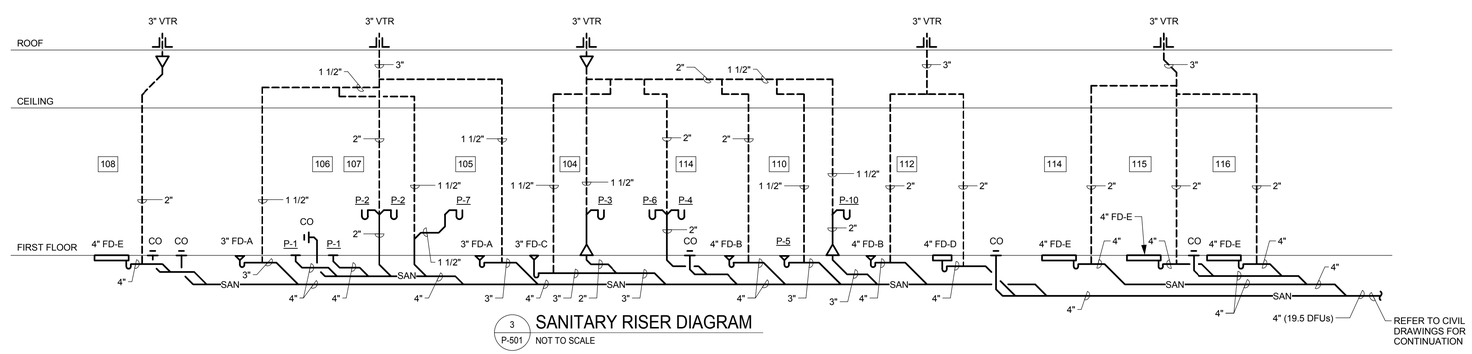

3 P-501 SANITARY RISER DIAGRAM
NOT TO SCALE

QUINN EVANS ARCHITECTS

2121 WARD PLACE, NW
FOURTH FLOOR
WASHINGTON, DC 20007

v 202 298 6700
f 202 298 6666

WWW.QUINNEVANS.COM

Mueller

Mueller Associates, Inc.
Consulting Engineers
1401 S. Edgewood Street
Baltimore, Maryland 21227
410.646.4500 tel > 410.646.4738 fax
www.muellerassoc.com

FERRY FARM PHASE 1 IMPROVEMENTS M&O BUILDING

268 Kings Hwy, Fredericksburg, VA 22405

QEA # 31402900

PLUMBING RISERS

COMMONWEALTH OF VIRGINIA
DANIEL CARMINE
Lic. No. 040419
PROFESSIONAL ENGINEER
6/30/15

BUILDING PERMIT SUBMISSION
06/30/15

REVISIONS

NO.	DESCRIPTION	DATE

P-501

C:\Users\ksc\Documents\Ferry Farm M&O Building MEP Central_ksc.rvt
6/24/2015 5:27:04 PM