Engineers | Scientists | Planners | Designers

115 South 15th Street
Suite 200
Richmond, VA 23219
804.343.7100
f 804.343.1713

Architect
Quinn Evans Architects
2121 Ward Place, NW, 4th Floor
Washington, DC 20037
202.298.6700 · Fax 202.298.6666

Landscape Architect
AECOM
675 N. Washington Street, Suite 300
Alexandria, Virginia 22314
703.549.8728 · Fax 703.549.9134

Mechanical, Electrical, Plumbing - Site
Mueller
1401 S. Edgewood Street
Baltimore, Maryland 21227
410.646.4500 · Fax 410.646.4738

Mechanical, Electrical, Plumbing - Home Farm
Quantum Engineering Co., P.C.
48 Thatcher Street
Selkirk, New York 12158
518.767.9450 · Fax 518.767.9442

Dry Utility Design
Utility Professional Services, Inc.
406 Chatham Square Office Park, Suite 201
Fredericksburg, Virginia 22405
540.604.5877

Fire Marshall

Department of Health

Department of Utilities

Department of Public Works - Environmental

Virginia Department of Transportation

Agent

Ferry Farm Phase 1 Improvements

268 Kings Highway Fredericksburg, Virginia

Property Owners

Owner
The George Washington Foundation
268 Kings Highway
Fredericksburg, Virginia 22405
Phone · Fax

Applicant
VHB
115 South 15th Street, Suite 200
Richmond, Virginia 23219
804.343.7100 · Fax 804.343.1713

Tax Parcel | 54-93, 54-93 A

Zoning | Heritage Interpretation

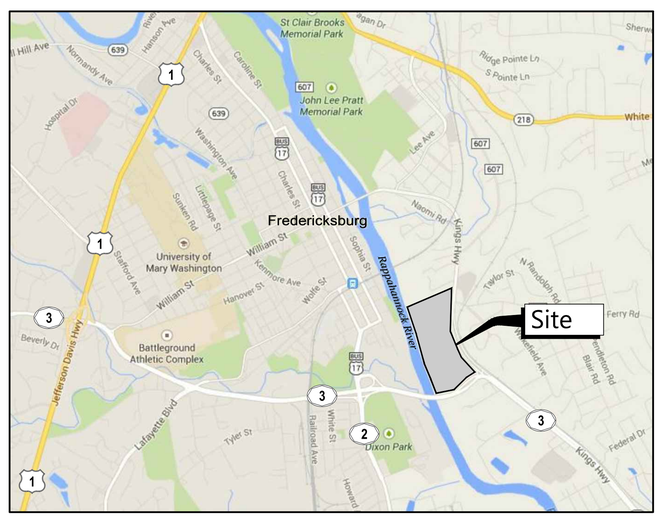

Site Location Map

VHB Project No. 37912.07

Issued for: Major Site Plan Approval

Site Plans

Issued for	Major Site Plan Approval
Date Issued	December 19, 2014
Latest Issue	December 19, 2014

Number	Drawing Title	Latest Issue
C-100	Legend and General Notes	12/19/2014
C-101	Existing Conditions Plan	12/19/2014
C-200	Overall Demolition & Erosion Control Plan Phase I	12/19/2014
C-201 to C-202	Demolition & Erosion Control Plan Phase I	12/19/2014
C-203	Overall Erosion Control Plan Phase II	12/19/2014
C-204 to C-205	Erosion Control Plan Phase II	12/19/2014
C-206	Erosion Control Notes	12/19/2014
C-207 to C-208	Erosion Control Details	12/19/2014
C-209	Soils Map	12/19/2014
C-300	Overall Layout and Materials Plan	12/19/2014
C-301 to C-307	Layout and Materials Plan	12/19/2014
C-400	Overall Grading Plan	12/19/2014
C-401 to C-407	Grading Plan	12/19/2014
C-500	Overall Utility Plan	12/19/2014
C-501 to C-507	Utility Plan	12/19/2014
C-508	Offsite Sanitary Sewer Site Plan	12/19/2014
C-601 to C-609	Details	12/19/2014
C-701	Road Profile	12/19/2014
C-702	Cross Sections	12/19/2014
C-703	Sight Distance	12/19/2014
C-704 to C-707	Utility Profiles	12/19/2014
C-801	Pre-Development Drainage Areas	12/19/2014
C-802	Post-Development Drainage Areas	12/19/2014
C-803	Culvert Drainage Areas	12/19/2014
C-901 to C-903	Calculations	12/19/2014
L-001	Overall Landscape Plan	12/19/2014
L-101 to L-107	Landscape Plan	12/19/2014
L-201	Grading Plan - Home Farm	12/19/2014
L-202	Site Sections	12/19/2014
L-501 to L-504	Site Details	12/19/2014
LP-301	Planting Details and Planting Schedule	12/19/2014
LP-302 to LP-303	Planting Details	12/19/2014
MOT-1 and MOT-2	Maintenance of Traffic Plan	12/19/2014
MP-1	Overall Site Plan - Ultimate Development	12/19/2014

\\VHB\PROJ\RICHMOND\37912.07 QEA FERRY FARM PHASE I\CAD\LD\PLANSET\37912.07-CV 19 December 2014

Legend

Exist.	Prop.	
L=43.84'		PROPERTY LINE
		PROJECT LIMIT LINE
		RIGHT-OF-WAY/PROPERTY LINE
		EASEMENT
		BUILDING SETBACK
10+00	10+00	BASELINE
		CONSTRUCTION LAYOUT
		ZONING LINE
TL		TOWN LINE
		LIMIT OF DISTURBANCE
		WETLAND LINE WITH FLAG
		FLOODPLAIN
BLSF		BORDERING LAND SUBJECT TO FLOODING
BZ		WETLAND BUFFER ZONE
RMA		RMA - RESOURCE MANAGEMENT AREA
RPA		RPA - RESOURCE PROTECTION AREA
		GRAVEL ROAD
EOP	EOP	EDGE OF PAVEMENT
MS-3, 3A	MS-3, 3A	ASPHALT CONCRETE CURB AND MEDIAN
CG-2	CG-2	STANDARD 6" CURB
CG-3	CG-3	STANDARD 4" CURB
CG-6	CG-6	COMBINATION 6" CURB & GUTTER
CG-7	CG-7	COMBINATION 4" CURB & GUTTER
		FIRE LANE STRIPING
		LIMIT OF CURB TYPE
		SAWCUT
		BUILDING
	EN	BUILDING ENTRANCE
	LD	LOADING DOCK
		BOLLARD
D	D	DUMPSTER PAD
		SIGN
		DOUBLE SIGN
		STEEL GUARDRAIL
		WOOD GUARDRAIL
		PATH
		TREE LINE
		WIRE FENCE
		FENCE
		STOCKADE FENCE
		CHAIN LINK FENCE
		STONE WALL
		RETAINING WALL
		STREAM / POND / WATER COURSE
		DETENTION BASIN
		HAY BALES
		SILT FENCE
4	4	MINOR CONTOUR
20	20	MAJOR CONTOUR
10	10	PARKING COUNT
	C10	COMPACT PARKING STALLS
DYL	DYL	DOUBLE YELLOW LINE
SL	SL	STOP LINE
		CROSSWALK
		ACCESSIBLE CURB RAMP
		HANDICAP PARKING
VAN	VAN	VAN-ACCESSIBLE HANDICAP PARKING

Exist.	Prop.	
		CONCRETE PAVEMENT
		STANDARD DUTY PAVEMENT
		HEAVY DUTY PAVEMENT
		RIPRAP
		CONSTRUCTION ENTRANCE
27.35 TC×	TC27.35×	TOP OF CURB ELEVATION
26.85 BC×	BC26.85×	BOTTOM OF CURB ELEVATION
26.85 FL×	FL26.85×	FLOW LINE ELEVATION
26.85 EP×	EP26.85×	EDGE OF PAVEMENT ELEVATION
132.75 ×	132.75 ×	SPOT ELEVATION
45.0 TW× 38.5 BW×	45.0 TW× 38.5 BW×	TOP & BOTTOM OF WALL ELEVATION
		BORING LOCATION
		TEST PIT LOCATION
MW	MW	MONITORING WELL
UD	UD	UNDERDRAIN
12"D	12"D	DRAINAGE LINE
6"RD	6"RD	ROOF DRAIN
12"S	12"S	SEWER LINE
OHW	OHW	OVERHEAD WIRE
6"W	6"W	WATER LINE
4"FP	4"FP	FIRE PROTECTION LINE
2"DW	2"DW	DOMESTIC WATER LINE
3"G	G	GAS LINE
UGE	UGE	UNDERGROUND ELECTRIC
T	T	TELEPHONE LINE
FA	FA	FIRE ALARM
CATV	CATV	CABLE TV
	DI	DRAIN INLET (VDOT DI-1 OR DI-7)
		DRAIN INLET (VDOT DI-3B)
		DRAIN INLET (VDOT DI-3C)
		DRAIN MANHOLE
TD		TRENCH DRAIN
		PLUG OR STUB
		FLARED END SECTION
		HEADWALL
S		SEWER MANHOLE
CO		SEWER CLEANOUT
CS	CS	CURB STOP & BOX
WV	WV	WATER VALVE & BOX
TSV	TSV	TAPPING SLEEVE, VALVE & BOX
		SIAMESE CONNECTION
HYD	HYD	FIRE HYDRANT
WM	WM	WATER METER
PIV	PIV	POST INDICATOR VALVE
W	W	WATER WELL
GG	GG	GAS GATE
GM	GM	GAS METER
E		ELECTRIC MANHOLE
EM	EM	ELECTRIC METER
		LIGHT POLE
T		TELEPHONE MANHOLE
T	T	TRANSFORMER PAD
		UTILITY POLE
		GUY POLE
		GUY WIRE & ANCHOR
HH	HH	HAND HOLE
PB	PB	PULL BOX
Matchline		MATCHLINE

Abbreviations

General

ABAN	ABANDON
ACR	ACCESSIBLE CURB RAMP
ADJ	ADJUST
APPROX	APPROXIMATE
BIT	BITUMINOUS
BS	BOTTOM OF SLOPE
B'WLL	BROKEN WHITE LANE LINE
CONC	CONCRETE
DYCL	DOUBLE YELLOW CENTER LINE
EL	ELEVATION
ELEV	ELEVATION
EXIST	EXISTING
FDN	FOUNDATION
GRAN	GRANITE
GTD	GRADE TO DRAIN
LA	LANDSCAPE AREA
LOD	LIMIT OF DISTURBANCE
MAX	MAXIMUM
MIN	MINIMUM
NIC	NOT IN CONTRACT
NTS	NOT TO SCALE
PERF	PERFORATED
PROP	PROPOSED
REM	REMOVE
RET	RETAIN
R&D	REMOVE AND DISPOSE
R&R	REMOVE AND RESET
SWEL	SOLID WHITE EDGE LINE
SWLL	SOLID WHITE LANE LINE
TS	TOP OF SLOPE
TYP	TYPICAL

Utility

CB	CATCH BASIN
CMP	CORRUGATED METAL PIPE
CO	CLEAN OUT
DCB	DOUBLE CATCH BASIN
DMH	DRAIN MANHOLE
DI	DRAIN INLET
CIP	CAST IRON PIPE
COND	CONDUIT
DIP	DUCTILE IRON PIPE
ES	END SECTION
EW	END WALL
FES	FLARED END SECTION
F&G	FRAME AND GRATE
F&C	FRAME AND COVER
FM	FORCE MAIN
GT	GREASE TRAP
GI	GUTTER INLET
HDPE	HIGH DENSITY POLYETHYLENE PIPE
HH	ELECTRIC HANDHOLE
HW	HEADWALL
HYD	HYDRANT
MES	METAL END SECTION
INV	INVERT ELEVATION
I=	INVERT ELEVATION
PWW	PAVED WATER WAY
PVC	POLYVINYLCHLORIDE PIPE
RCP	REINFORCED CONCRETE PIPE
R=	RIM ELEVATION
SMH	SEWER MANHOLE
TSV	TAPPING SLEEVE, VALVE AND BOX
UP	UTILITY POLE

Notes:

General

1. THE "MISS UTILITY LAW" REQUIRES FOR THE CONTRACTOR TO CALL 811 AT LEAST 3 WORKING DAYS IN ADVANCE OF THE PLANNED WORK TO ALLOW TIME FOR MARKING, THAT THE MARKS BE RESPECTED AND PROTECTED, AND THAT EXCAVATION BE COMPLETED CAREFULLY.
2. CONTRACTOR SHALL BE RESPONSIBLE FOR SITE SECURITY AND JOB SAFETY. CONSTRUCTION ACTIVITIES SHALL BE IN ACCORDANCE WITH OSHA STANDARDS AND LOCAL REQUIREMENTS.
3. ACCESSIBLE ROUTES, PARKING SPACES, RAMPS, SIDEWALKS AND WALKWAYS SHALL BE CONSTRUCTED IN CONFORMANCE WITH THE FEDERAL AMERICANS WITH DISABILITIES ACT AND WITH STATE AND LOCAL LAWS AND REGULATIONS (WHICHEVER ARE MORE STRINGENT).
4. AREAS DISTURBED DURING CONSTRUCTION AND NOT RESTORED WITH IMPERVIOUS SURFACES (BUILDINGS, PAVEMENTS, WALKS, ETC.) SHALL FOLLOW DETAIL PROVIDED BY VIRGINIA EROSION AND SEDIMENT CONTROL HANDBOOK FOR SITE SPECIFIC SEEDING MIXTURES IN ACCORDANCE WITH STANDARD & SPECIFICATION 3.32.
5. WITHIN THE LIMITS OF THE BUILDING FOOTPRINT, THE SITE CONTRACTOR SHALL PERFORM EARTHWORK OPERATIONS REQUIRED UP TO SUBGRADE ELEVATIONS.
6. WORK WITHIN THE LOCAL RIGHTS-OF-WAY SHALL CONFORM TO LOCAL MUNICIPAL STANDARDS. WORK WITHIN STATE RIGHTS-OF-WAY SHALL CONFORM TO THE LATEST EDITION OF THE STATE HIGHWAY DEPARTMENTS STANDARD SPECIFICATIONS FOR HIGHWAYS AND BRIDGES.
7. UPON AWARD OF CONTRACT, CONTRACTOR SHALL MAKE NECESSARY CONSTRUCTION NOTIFICATIONS AND APPLY FOR AND OBTAIN NECESSARY PERMITS, PAY FEES, AND POST BONDS ASSOCIATED WITH THE WORK INDICATED ON THE DRAWINGS, IN THE SPECIFICATIONS, AND IN THE CONTRACT DOCUMENTS. DO NOT CLOSE OR OBSTRUCT ROADWAYS, SIDEWALKS, AND FIRE HYDRANTS, WITHOUT APPROPRIATE PERMITS.
8. TRAFFIC SIGNAGE AND PAVEMENT MARKINGS SHALL CONFORM TO THE MANUAL OF UNIFORM TRAFFIC CONTROL DEVICES.
9. AREAS OUTSIDE THE LIMITS OF PROPOSED WORK DISTURBED BY THE CONTRACTOR'S OPERATIONS SHALL BE RESTORED BY THE CONTRACTOR TO THEIR ORIGINAL CONDITION AT THE CONTRACTOR'S EXPENSE.
10. IN THE EVENT THAT SUSPECTED CONTAMINATED SOIL, GROUNDWATER, AND OTHER MEDIA ARE ENCOUNTERED DURING EXCAVATION AND CONSTRUCTION ACTIVITIES BASED ON VISUAL, OLFACTORY, OR OTHER EVIDENCE, THE CONTRACTOR SHALL STOP WORK IN THE VICINITY OF THE SUSPECT MATERIAL TO AVOID FURTHER SPREADING OF THE MATERIAL, AND SHALL NOTIFY THE OWNER IMMEDIATELY SO THAT THE APPROPRIATE TESTING AND SUBSEQUENT ACTION CAN BE TAKEN.
11. CONTRACTOR SHALL PREVENT DUST, SEDIMENT, AND DEBRIS FROM EXITING THE SITE AND SHALL BE RESPONSIBLE FOR CLEANUP, REPAIRS AND CORRECTIVE ACTION IF SUCH OCCURS.
12. DAMAGE RESULTING FROM CONSTRUCTION LOADS SHALL BE REPAIRED BY THE CONTRACTOR AT NO ADDITIONAL COST TO OWNER.
13. CONTRACTOR SHALL CONTROL STORMWATER RUNOFF DURING CONSTRUCTION TO PREVENT ADVERSE IMPACTS TO OFF SITE AREAS, AND SHALL BE RESPONSIBLE TO REPAIR RESULTING DAMAGES, IF ANY, AT NO COST TO OWNER.
14. THIS PROJECT DISTURBS MORE THAN ONE ACRE OF LAND AND FALLS WITHIN THE VIRGINIA STORMWATER MANAGEMENT PROGRAM (VSMP). GENERAL CONSTRUCTION PERMIT (GCP) PROGRAM AS ADMINISTERED BY THE VIRGINIA DEPARTMENT OF ENVIRONMENTAL QUALITY (DEQ) UNDER THE JURISDICTION OF THE EPA. PRIOR TO THE START OF CONSTRUCTION, THE CONTRACTOR SHALL FILE A GCP NOTICE OF INTENT WITH THE DEQ AND PREPARE A STORMWATER POLLUTION PREVENTION PLAN IN ACCORDANCE WITH THE VSMP REGULATIONS.

Utilities

1. THE LOCATIONS, SIZES, AND TYPES OF EXISTING UTILITIES ARE SHOWN AS AN APPROXIMATE REPRESENTATION ONLY. THE OWNER OR IT'S REPRESENTATIVE(S) HAVE NOT INDEPENDENTLY VERIFIED THIS INFORMATION AS SHOWN ON THE PLANS. THE UTILITY INFORMATION SHOWN DOES NOT GUARANTEE THE ACTUAL EXISTENCE, SERVICEABILITY, OR OTHER DATA CONCERNING THE UTILITIES, NOR DOES IT GUARANTEE AGAINST THE POSSIBILITY THAT ADDITIONAL UTILITIES MAY BE PRESENT THAT ARE NOT SHOWN ON THE PLANS. PRIOR TO ORDERING MATERIALS AND BEGINNING CONSTRUCTION, THE CONTRACTOR SHALL VERIFY AND DETERMINE THE EXACT LOCATIONS, SIZES, AND ELEVATIONS OF THE POINTS OF CONNECTIONS TO EXISTING UTILITIES AND, SHALL CONFIRM THAT THERE ARE NO INTERFERENCES WITH EXISTING UTILITIES AND THE PROPOSED UTILITY ROUTES, INCLUDING ROUTES WITHIN THE PUBLIC RIGHTS OF WAY.
2. WHERE AN EXISTING UTILITY IS FOUND TO CONFLICT WITH THE PROPOSED WORK, OR EXISTING CONDITIONS DIFFER FROM THOSE SHOWN SUCH THAT THE WORK CANNOT BE COMPLETED AS INTENDED, THE LOCATION, ELEVATION, AND SIZE OF THE UTILITY SHALL BE ACCURATELY DETERMINED WITHOUT DELAY BY THE CONTRACTOR, AND THE INFORMATION FURNISHED IN WRITING TO THE OWNER'S REPRESENTATIVE FOR THE RESOLUTION OF THE CONFLICT AND CONTRACTOR'S FAILURE TO NOTIFY PRIOR TO PERFORMING ADDITIONAL WORK RELEASES OWNER FROM OBLIGATIONS FOR ADDITIONAL PAYMENTS WHICH OTHERWISE MAY BE WARRANTED TO RESOLVE THE CONFLICT.
3. SET CATCH BASIN RIMS, AND INVERTS OF SEWERS, DRAINS, AND DITCHES IN ACCORDANCE WITH ELEVATIONS ON THE GRADING AND UTILITY PLANS.
4. RIM ELEVATIONS FOR DRAIN AND SEWER MANHOLES, WATER VALVE COVERS, GAS GATES, ELECTRIC AND TELEPHONE PULL BOXES, AND MANHOLES, AND OTHER SUCH ITEMS, ARE APPROXIMATE AND SHALL BE SET/RESET AS FOLLOWS:
   - A. PAVEMENTS AND CONCRETE SURFACES: FLUSH
   - B. ALL SURFACES ALONG ACCESSIBLE ROUTES: FLUSH
   - C. LANDSCAPE, TOPSOIL AND SEED, AND OTHER EARTH SURFACE AREAS: ONE INCH ABOVE SURROUNDING AREA AND TAPER EARTH TO THE RIM ELEVATION.
5. THE LOCATION, SIZE, DEPTH, AND SPECIFICATIONS FOR CONSTRUCTION OF PROPOSED PRIVATE UTILITY SERVICES SHALL BE INSTALLED ACCORDING TO THE REQUIREMENTS PROVIDED BY, AND APPROVED BY, THE RESPECTIVE UTILITY COMPANY (GAS, TELEPHONE, ELECTRIC, FIRE ALARM, ETC.). FINAL DESIGN LOADS AND LOCATIONS TO BE COORDINATED WITH OWNER AND ARCHITECT.
6. CONTRACTOR SHALL MAKE ARRANGEMENTS FOR THE ALTERATION AND ADJUSTMENT OF GAS, ELECTRIC, TELEPHONE, FIRE ALARM, AND ANY OTHER PRIVATE UTILITIES, WHETHER WORK IS PERFORMED BY CONTRACTOR OR BY THE UTILITIES COMPANY.
7. UTILITY PIPE MATERIALS SHALL BE AS FOLLOWS, UNLESS OTHERWISE NOTED ON THE PLAN:
   - A. WATER PIPES SHALL BE CLASS 52 DUCTILE IRON AND MEET REQUIREMENTS OF AWWA C150. PIPE SIZES 2" AND SMALLER SHALL BE TYPE-K COPPER.
   - B. SANITARY SEWER PIPES SHALL BE SDR 35 PVC. CASING PIPE FOR SANITARY SEWER SHALL BE SEAMLESS STEEL WITH MIN. STRENGTH OF 36 KSI. PRESSURIZED SANITARY FORCE MAINS SHALL BE SDR 18 PVC PIPE, MINIMUM PRESSURE CLASS 150.
   - C. STORM DRAINAGE PIPES SHALL CLASS III REINFORCED CONCRETE PIPE FOR DIAMETERS 15" AND LARGER. SMALLER PIPES SHALL BE PVC, SDR 35.
8. CONTRACTOR SHALL COORDINATE WITH ELECTRICAL CONTRACTOR AND SHALL FURNISH EXCAVATION, INSTALLATION, AND BACKFILL OF ELECTRICAL FURNISHED SITEWORK RELATED ITEMS SUCH AS PULL BOXES, CONDUITS, DUCT BANKS, LIGHT POLE BASES, AND CONCRETE PADS. CONTRACTOR SHALL FURNISH CONCRETE ENCASEMENT OF DUCT BANKS IF REQUIRED BY THE UTILITY COMPANY AND AS INDICATED ON THE DRAWINGS.
9. CONTRACTOR SHALL EXCAVATE AND BACKFILL TRENCHES FOR GAS IN ACCORDANCE WITH GAS COMPANY'S REQUIREMENTS.
10. ALL DRAINAGE AND SANITARY STRUCTURE INTERIOR DIAMETERS (4' MIN.) SHALL BE DETERMINED BY THE MANUFACTURER BASED ON THE PIPE CONFIGURATIONS SHOWN ON THESE PLANS AND LOCAL MUNICIPAL STANDARDS. FOR MANHOLES THAT ARE 20 FEET IN DEPTH AND GREATER, THE MINIMUM DIAMETER SHALL BE 5 FEET.
11. LOCATION OF FITTINGS SHOWN HEREON ARE APPROXIMATE ONLY. CONTRACTOR SHALL DETERMINE ALL FITTING REQUIREMENTS AND LOCATIONS FROM ACTUAL FIELD CONDITIONS.
12. PIPE LENGTHS SHOWN HEREON ARE FROM CENTERLINE TO CENTERLINE OF STRUCTURE AND ARE APPROXIMATE. CONTRACTOR SHALL DETERMINE ACTUAL PIPE LENGTHS FROM FIELD CONDITIONS.
13. INVERTS CONTROL ELEVATIONS AT ALL STRUCTURES, SLOPES AND LENGTHS ARE APPROXIMATE ONLY.
14. RIM ELEVATIONS SHOWN HEREON ARE APPROXIMATE ONLY. CONTRACTOR SHALL SET ALL STRUCTURES FLUSH WITH FINAL GRADE.

Layout and Materials

1. DIMENSIONS ARE FROM FACE OF BUILDING, FACE OF WALL, AND CENTER LINE OF PAVEMENT MARKINGS, UNLESS OTHERWISE NOTED.
2. SEE ARCHITECTURAL DRAWINGS FOR EXACT BUILDING DIMENSIONS AND DETAILS CONTIGUOUS TO THE BUILDING, INCLUDING SIDEWALKS, RAMPS, BUILDING ENTRANCES, STAIRWAYS, UTILITY PENETRATIONS, CONCRETE DOOR PADS, COMPACTOR PAD, LOADING DOCKS, BOLLARDS, ETC.
3. PROPOSED BOUNDS AND ANY EXISTING PROPERTY LINE MONUMENTATION DISTURBED DURING CONSTRUCTION SHALL BE SET OR RESET BY A PROFESSIONAL LICENSED SURVEYOR.
4. PRIOR TO START OF CONSTRUCTION, CONTRACTOR SHALL VERIFY EXISTING PAVEMENT ELEVATIONS AT INTERFACE WITH PROPOSED PAVEMENTS, AND EXISTING GROUND ELEVATIONS ADJACENT TO DRAINAGE OUTLETS TO ASSURE PROPER TRANSITIONS BETWEEN EXISTING AND PROPOSED FACILITIES.
5. SYMBOLS AND LEGENDS OF PROJECT FEATURES ARE GRAPHIC REPRESENTATIONS AND ARE NOT NECESSARILY SCALED TO THEIR ACTUAL DIMENSIONS OR LOCATIONS ON THE DRAWINGS. THE CONTRACTOR SHALL REFER TO THE DETAIL SHEET DIMENSIONS, MANUFACTURERS' LITERATURE, SHOP DRAWINGS AND FIELD MEASUREMENTS OF SUPPLIED PRODUCTS FOR LAYOUT OF THE PROJECT FEATURES.
6. CONTRACTOR SHALL NOT RELY SOLELY ON ELECTRONIC VERSIONS OF PLANS, SPECIFICATIONS, AND DATA FILES THAT ARE OBTAINED FROM THE DESIGNERS, BUT SHALL VERIFY LOCATION OF PROJECT FEATURES IN ACCORDANCE WITH THE PAPER COPIES OF THE PLANS AND SPECIFICATIONS THAT ARE SUPPLIED AS PART OF THE CONTRACT DOCUMENTS.

Demolition

1. CONTRACTOR SHALL REMOVE AND LEGALLY DISPOSE OF EXISTING MANMADE SURFACE FEATURES WITHIN THE LIMIT OF WORK INCLUDING BUILDINGS, STRUCTURES, PAVEMENTS, SLABS, CURBING, FENCES, UTILITY POLES, SIGNS, ETC. UNLESS INDICATED OTHERWISE ON THE DRAWINGS. REMOVE AND DISPOSE OF EXISTING UTILITIES, FOUNDATIONS AND UNSUITABLE MATERIAL BENEATH AND FOR A DISTANCE OF 10 FEET BEYOND THE PROPOSED BUILDING FOOTPRINT INCLUDING EXTERIOR COLUMNS.
2. EXISTING UTILITIES SHALL BE TERMINATED, UNLESS OTHERWISE NOTED, IN CONFORMANCE WITH LOCAL, STATE AND INDIVIDUAL UTILITY COMPANY STANDARD SPECIFICATIONS AND DETAILS. THE CONTRACTOR SHALL COORDINATE UTILITY SERVICE DISCONNECTS WITH THE UTILITY REPRESENTATIVES.
3. CONTRACTOR SHALL LEGALLY DISPOSE OF DEMOLITION DEBRIS IN ACCORDANCE WITH APPLICABLE FEDERAL, STATE AND LOCAL REGULATIONS, ORDINANCES AND STATUTES.
4. THE DEMOLITION LIMITS DEPICTED IN THE PLANS IS INTENDED TO AID THE CONTRACTOR DURING THE BIDDING AND CONSTRUCTION PROCESS AND IS NOT INTENDED TO DEPICT EACH AND EVERY ELEMENT OF DEMOLITION. THE CONTRACTOR IS RESPONSIBLE FOR IDENTIFYING THE DETAILED SCOPE OF DEMOLITION BEFORE SUBMITTING ITS BID/PROPOSAL TO PERFORM THE WORK AND SHALL MAKE NO CLAIMS AND SEEK NO ADDITIONAL COMPENSATION FOR CHANGED CONDITIONS OR UNFORESEEN OR LATENT SITE CONDITIONS RELATED TO ANY CONDITIONS DISCOVERED DURING EXECUTION OF THE WORK.
5. UNLESS OTHERWISE SPECIFICALLY PROVIDED ON THE PLANS OR IN THE SPECIFICATIONS, THE ENGINEER HAS NOT PREPARED DESIGNS FOR AND SHALL HAVE NO RESPONSIBILITY FOR THE PRESENCE, DISCOVERY, REMOVAL, ABATEMENT OR DISPOSAL OF HAZARDOUS MATERIALS, TOXIC WASTES OR POLLUTANTS AT THE PROJECT SITE. THE ENGINEER SHALL NOT BE RESPONSIBLE FOR ANY CLAIMS OF LOSS, DAMAGE, EXPENSE, DELAY, INJURY OR DEATH ARISING FROM THE PRESENCE OF HAZARDOUS MATERIAL AND CONTRACTOR SHALL INDEMNIFY AND HOLD HARMLESS THE ENGINEER FROM ANY CLAIMS MADE IN CONNECTION THEREWITH. MOREOVER, THE ENGINEER SHALL HAVE NO ADMINISTRATIVE OBLIGATIONS OF ANY TYPE WITH REGARD TO ANY CONTRACTOR AMENDMENT INVOLVING THE ISSUES OF PRESENCE, DISCOVERY, REMOVAL, ABATEMENT OR DISPOSAL OF ASBESTOS OR OTHER HAZARDOUS MATERIALS.

Erosion Control

1. PRIOR TO STARTING ANY OTHER WORK ON THE SITE, THE CONTRACTOR SHALL NOTIFY APPROPRIATE AGENCIES AND SHALL INSTALL EROSION CONTROL MEASURES AS SHOWN ON THE PLANS AND AS IDENTIFIED IN FEDERAL, STATE AND LOCAL APPROVAL DOCUMENTS PERTAINING TO THIS PROJECT.
2. CONTRACTOR SHALL INSPECT AND MAINTAIN EROSION CONTROL MEASURES, AND REMOVE SEDIMENT THEREFROM ON A WEEKLY BASIS AND WITHIN TWELVE HOURS AFTER EACH STORM EVENT AND DISPOSE OF SEDIMENTS IN AN UPLAND AREA SUCH THAT THEY DO NOT ENCUMBER OTHER DRAINAGE STRUCTURES AND PROTECTED AREAS.
3. CONTRACTOR SHALL BE FULLY RESPONSIBLE TO CONTROL CONSTRUCTION SUCH THAT SEDIMENTATION SHALL NOT AFFECT REGULATORY PROTECTED AREAS, WHETHER SUCH SEDIMENTATION IS CAUSED BY WATER, WIND OR DIRECT DEPOSIT.
4. CONTRACTOR SHALL PERFORM CONSTRUCTION SEQUENCING SUCH THAT EARTH MATERIALS ARE EXPOSED FOR A MINIMUM OF TIME BEFORE THEY ARE COVERED, SEEDED OR OTHERWISE STABILIZED TO PREVENT EROSION.
5. UPON COMPLETION OF CONSTRUCTION AND ESTABLISHMENT OF PERMANENT GROUND COVER, CONTRACTOR SHALL REMOVE AND DISPOSE OF EROSION CONTROL MEASURES AND CLEAN SEDIMENT AND DEBRIS FROM ENTIRE DRAINAGE AND SEWER SYSTEMS.

Existing Conditions Information

1. BASE PLAN: THE PROPERTY LINES SHOWN WERE DETERMINED BY AN ACTUAL FIELD SURVEY CONDUCTED BY VHB. THE TOPOGRAPHY AND PHYSICAL FEATURES ARE BASED ON AN AERIAL SURVEY BY AEROMETRIC IN 2007 AND SUPPLEMENTED WITH FIELD SURVEY IN SOME AREAS BY VHB IN 2007 AND 2014.
   - A. DELINEATION OF THE WETLANDS AND PLACEMENT OF THE FLAGS WAS PERFORMED BY: VHB IN 2014
   - B. FLAGS MARKING THE WETLANDS WERE LOCATED BY: VHB IN 2014
2. HORIZONTAL DATUM IS BASED ON VIRGINIA SOUTH DISTRICT, NAD 1983. ELEVATIONS SHOWN ON THIS PLAN REFER TO THE NAVD OF 1988.
3. GEOTECHNICAL DATA INCLUDING BORING LOCATIONS AND ELEVATIONS WERE OBTAINED FROM ECS.

Document Use

2. THESE PLANS AND CORRESPONDING CADD DOCUMENTS ARE INSTRUMENTS OF PROFESSIONAL SERVICE, AND SHALL NOT BE USED, IN WHOLE OR IN PART, FOR ANY PURPOSE OTHER THAN FOR WHICH IT WAS CREATED WITHOUT THE EXPRESSED, WRITTEN CONSENT OF VHB. ANY UNAUTHORIZED USE, REUSE, MODIFICATION OR ALTERATION, INCLUDING AUTOMATED CONVERSION OF THIS DOCUMENT SHALL BE AT THE USER'S SOLE RISK WITHOUT LIABILITY OR LEGAL EXPOSURE TO VHB.

QUINN EVANS ARCHITECTS

2121 WARD PLACE, NW
FOURTH FLOOR
WASHINGTON, DC 20036

v 202 298 6700
f 202 298 6666

WWW.QUINNEVANS.COM

vhb

115 SOUTH 15TH STREET
SUITE 200
RICHMOND, VIRGINIA 23219

804.343.7100 | FAX 804.343.1713

FERRY FARM PHASE 1 IMPROVEMENTS

268 Kings Hwy,
Fredericksburg, VA
22405

QEA # 31402900

Legend and General Notes

COMMONWEALTH OF VIRGINIA
JOHN P. DORTY
Lic. No. 039452
12/19/14
PROFESSIONAL ENGINEER

SITE PERMIT SUBMISSION
12/19/14

REVISIONS

NO.	DESCRIPTION	DATE

C-100

12/19/2014 5:09:41 PM \\VHB\PROJ\RICHMOND\37912.07 QEA FERRY FARM PHASE I\CAD\LDP\LANDSET\37912-07-LG

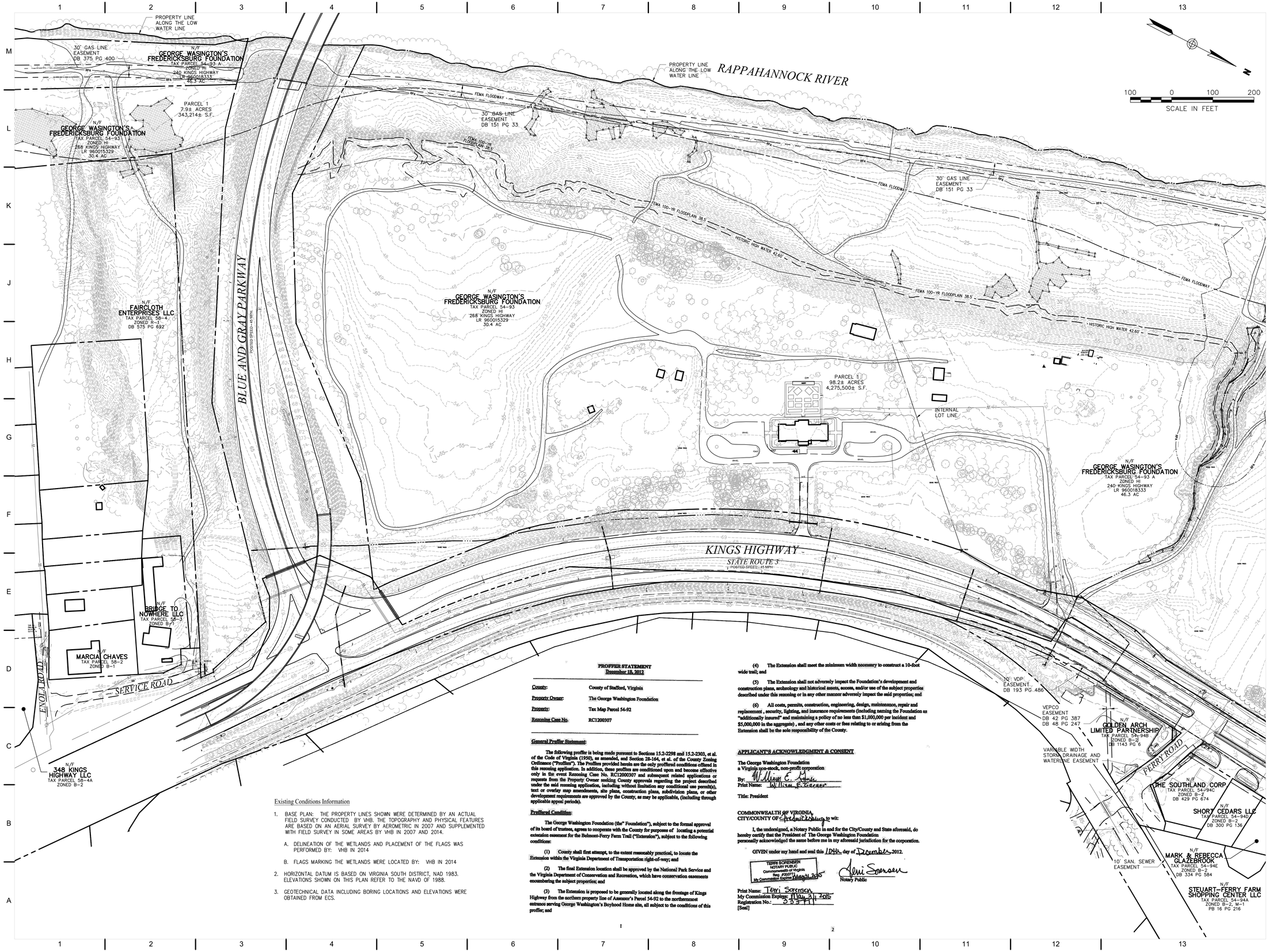

Existing Conditions Information

1. BASE PLAN: THE PROPERTY LINES SHOWN WERE DETERMINED BY AN ACTUAL FIELD SURVEY CONDUCTED BY VHB. THE TOPOGRAPHY AND PHYSICAL FEATURES ARE BASED ON AN AERIAL SURVEY BY AEROMETRIC IN 2007 AND SUPPLEMENTED WITH FIELD SURVEY IN SOME AREAS BY VHB IN 2007 AND 2014.
   A. DELINEATION OF THE WETLANDS AND PLACEMENT OF THE FLAGS WAS PERFORMED BY: VHB IN 2014
   B. FLAGS MARKING THE WETLANDS WERE LOCATED BY: VHB IN 2014
2. HORIZONTAL DATUM IS BASED ON VIRGINIA SOUTH DISTRICT, NAD 1983. ELEVATIONS SHOWN ON THIS PLAN REFER TO THE NAVD OF 1988.
3. GEOTECHNICAL DATA INCLUDING BORING LOCATIONS AND ELEVATIONS WERE OBTAINED FROM ECS.

PROFFER STATEMENT
December 18, 2012

County:	County of Stafford, Virginia
Property Owner:	The George Washington Foundation
Property:	Tax Map Parcel 54-92
Rezoning Case No.	RC1200307

General Proffer Statement:

The following proffer is being made pursuant to Sections 15.2-2298 and 15.2-2303, et al. of the Code of Virginia (1950), as amended, and Section 28-164, et al. of the County Zoning Ordinance ("Proffers"). The Proffers provided herein are the only proffered conditions offered in this rezoning application. In addition, these proffers are conditioned upon and become effective only in the event Rezoning Case No. RC12000307 and subsequent related applications or requests from the Property Owner seeking County approvals regarding the project described under the said rezoning application, including without limitation any conditional use permit(s), text or overlay map amendments, site plans, construction plans, subdivision plans, or other development requirements are approved by the County, as may be applicable, (including through applicable appeal periods).

Proffered Conditions:

The George Washington Foundation (the" Foundation"), subject to the formal approval of its board of trustees, agrees to cooperate with the County for purposes of locating a potential extension easement for the Belmont-Ferry Farm Trail ("Extension"), subject to the following conditions:

(1) County shall first attempt, to the extent reasonably practical, to locate the Extension within the Virginia Department of Transportation right-of-way; and

(2) The final Extension location shall be approved by the National Park Service and the Virginia Department of Conservation and Recreation, which have conservation easements encumbering the subject properties; and

(3) The Extension is proposed to be generally located along the frontage of Kings Highway from the northern property line of Assessor's Parcel 54-92 to the northernmost entrance serving George Washington's Boyhood Home site, all subject to the conditions of this proffer; and

1

(4) The Extension shall meet the minimum width necessary to construct a 10-foot wide trail; and

(5) The Extension shall not adversely impact the Foundation's development and construction plans, archeology and historical assets, access, and/or use of the subject properties described under this rezoning or in any other manner adversely impact the said properties; and

(6) All costs, permits, construction, engineering, design, maintenance, repair and replacement , security, lighting, and insurance requirements (including naming the Foundation as "additionally insured" and maintaining a policy of no less than $1,000,000 per incident and $5,000,000 in the aggregate) , and any other costs or fees relating to or arising from the Extension shall be the sole responsibility of the County.

APPLICANT'S ACKNOWLEDGMENT & CONSENT

The George Washington Foundation
a Virginia non-stock, non-profit corporation

By: William E. Kraus
Print Name: William E. Kraus

Title: President

COMMONWEALTH OF VIRGINIA
CITY/COUNTY OF Fredericksburg to wit:

I, the undersigned, a Notary Public in and for the City/County and State aforesaid, do hereby certify that the President of The George Washington Foundation personally acknowledged the same before me in my aforesaid jurisdiction for the corporation.

GIVEN under my hand and seal this 17th day of December, 2012.

TERRI SORENSEN
NOTARY PUBLIC
Commonwealth of Virginia
Reg. #203771
My Commission Expires March 31, 2015

Terri Sorensen
Notary Public

Print Name: Terri Sorensen
My Commission Expires: March 31, 2015
Registration No.: 203771
[Seal]

2

QUINN EVANS ARCHITECTS

2121 WARD PLACE, NW
FOURTH FLOOR
WASHINGTON, DC 20036

v 202 298 6700
f 202 298 6666

WWW.QUINNEVANS.COM

vhb

115 SOUTH 15TH STREET
SUITE 200
RICHMOND, VIRGINIA 23219

804.343.7100 | FAX 804.343.1713

FERRY FARM PHASE 1 IMPROVEMENTS

268 Kings Hwy, Fredericksburg, VA 22405

QEA # 31402900

Existing Conditions Plan

COMMONWEALTH OF VIRGINIA
JOHN P. CARTY
Lic. No. 039452
12/19/14
PROFESSIONAL ENGINEER

SITE PERMIT SUBMISSION
12/19/14

REVISIONS

NO.	DESCRIPTION	DATE

C-101

12/9/2014 5:09:41 PM
\\VHB\PROJ\RICHMOND\37912\07-QEA FERRY FARM PHASE ECA\DLP\LANSET\37912\07-EX

Demolition Notes

1. CONTRACTOR SHALL INSTALL EROSION CONTROL MEASURES PRIOR TO DEMOLITION. CONTRACTOR SHALL REMOVE AND DISPOSE OF EXISTING MANMADE SURFACE FEATURES WITHIN THE LIMIT OF WORK INCLUDING BUILDINGS, STRUCTURES, PAVEMENTS, SLABS, CURBING, FENCES, UTILITY POLES, SIGNS, ETC. UNLESS INDICATED OTHERWISE ON THE DRAWINGS. REMOVE AND DISPOSE OF EXISTING UTILITIES, FOUNDATIONS AND UNSUITABLE MATERIAL BENEATH AND FOR A DISTANCE OF 10 FEET BEYOND THE PROPOSED BUILDING FOOTPRINT INCLUDING EXTERIOR COLUMNS.
2. TERMINATE EXISTING UTILITIES, UNLESS OTHERWISE INDICATED, IN CONFORMANCE WITH LOCAL, STATE AND INDIVIDUAL UTILITY COMPANY STANDARD SPECIFICATIONS AND DETAILS. THE CONTRACTOR SHALL COORDINATE UTILITY SERVICE DISCONNECTS WITH THE UTILITY REPRESENTATIVES.
3. CONTRACTOR SHALL DISPOSE OF DEMOLITION DEBRIS LEGALLY IN ACCORDANCE WITH APPLICABLE FEDERAL, STATE AND LOCAL REGULATIONS, ORDINANCES AND STATUTES.
4. CONTRACTOR SHALL APPLY FOR AND OBTAIN ALL NECESSARY PERMITS FROM LOCAL AND STATE AUTHORITIES TO COMPLETE THE WORK.
5. THE DEMOLITION PLAN IS INTENDED TO AID THE CONTRACTOR DURING THE CONSTRUCTION PROCESS AND IS NOT INTENDED TO DEPICT EACH AND EVERY ELEMENT OF DEMOLITION. THE CONTRACTOR IS RESPONSIBLE FOR IDENTIFYING THE DETAILED SCOPE OF DEMOLITION BEFORE SUBMITTING ITS BID/PROPOSAL TO PERFORM THE WORK AND SHALL MAKE NO CLAIMS AND SEEK NO ADDITIONAL COMPENSATION FOR CHANGED CONDITIONS OR UNFORESEEN OR LATENT SITE CONDITIONS RELATED TO ANY CONDITIONS DISCOVERED DURING EXECUTION OF THE WORK.
6. UNLESS OTHERWISE SPECIFICALLY PROVIDED ON THE PLANS OR IN THE SPECIFICATIONS, THE ENGINEER HAS NOT PREPARED DESIGNS FOR AND SHALL HAVE NO RESPONSIBILITY FOR THE PRESENCE, DISCOVERY, REMOVAL, ABATEMENT OR DISPOSAL OF HAZARDOUS MATERIALS, TOXIC WASTES OR POLLUTANTS AT THE PROJECT SITE. THE ENGINEER SHALL NOT BE RESPONSIBLE FOR ANY CLAIMS OF LOSS, DAMAGE, EXPENSE, DELAY, INJURY OR DEATH ARISING FROM THE PRESENCE OF HAZARDOUS MATERIAL AND CONTRACTOR SHALL INDEMNIFY AND HOLD HARMLESS THE ENGINEER FROM ANY CLAIMS MADE IN CONNECTION THEREWITH. MOREOVER, THE ENGINEER SHALL HAVE NO ADMINISTRATIVE OBLIGATIONS OF ANY TYPE WITH REGARD TO ANY CONTRACTOR AMENDMENT INVOLVING THE ISSUES OF PRESENCE, DISCOVERY, REMOVAL, ABATEMENT OR DISPOSAL OF ASBESTOS OR OTHER HAZARDOUS MATERIALS.

Demolition Legend

PAVEMENT (RIGID OR FLEXIBLE), STRUCTURES, AND OTHER SITE FEATURES TO BE REMOVED UNLESS OTHERWISE INDICATED

XXXX - EXISTING UTILITIES, FENCES TO BE REMOVED

Sequence of Construction

THE FOLLOWING OUTLINES THE GENERAL CONSTRUCTION SEQUENCE THAT WILL BE EMPLOYED DURING THE SITE CONSTRUCTION PHASE.

1. CONTACT THE ENVIRONMENTAL INSPECTOR 48 HOURS PRIOR TO THE BEGINNING OF CONSTRUCTION ACTIVITIES TO ARRANGE A PRE-CONSTRUCTION MEETING.
2. INSTALL SAFETY FENCE, SILT FENCE, DIVERSION DIKES, AND OTHER PERIMETER CONTROLS AS SHOWN ON THE PLANS. CLEAR ONLY SUFFICIENT AREA TO INSTALL THESE MEASURES. VISITOR ACCESS THROUGH THE EXISTING ENTRANCE TO THE SITE IS TO REMAIN OPEN AT ALL TIMES.
3. ALL DIVERSIONS MUST BE SEEDED AND MULCHED IMMEDIATELY UPON CONSTRUCTION.
4. INSTALL TEMPORARY CONSTRUCTION ENTRANCE.
5. INSTALL SEDIMENT TRAPS AS SHOWN ON THE PLANS. CLEAR ONLY SUFFICIENT AREA TO INSTALL THE TRAPS. TRAPS MUST BE SEEDED AND MULCHED IMMEDIATELY UPON CONSTRUCTION.
6. INSTALL TEMPORARY STORM SEWER AND CULVERT INLET PROTECTION.
7. CONTRACTOR MAY NOT PROCEED PAST THIS POINT WITHOUT APPROVAL FROM THE OWNER AND THE COUNTY ENVIRONMENTAL INSPECTOR ON THE INSTALLATION OF THE INITIAL ESC MEASURES.
8. WITH APPROVAL, COMMENCE WITH REMAINING DEMOLITION AND GRADING OPERATIONS.
9. REFER TO LANDSCAPE PLANS FOR TREE REMOVAL AND TREE PROTECTION AREAS.
10. ANY CHANGES IN FENCE LAYOUTS OR ADJUSTMENTS TO THE PLANS AS SHOWN WILL REQUIRE APPROVAL FROM THE ENGINEER AND OWNER.
11. PROCEED TO PHASE II EROSION CONTROL.

Erosion Control Legend

- CE — CONSTRUCTION ENTRANCE
- DD — TEMPORARY DIVERSION DIKE
- CD — ROCK CHECK DAMS
- SF — SILT FENCE
- SAF — SAFETY FENCE
- CIP — CULVERT INLET PROTECTION
- B/M — SOIL STABILIZATION BLANKETS AND OR MATTING
- IP — STORM DRAIN INLET PROTECTION
- PS — PERMENANT SEEDING
- ST — TEMPORARY SEDIMENT TRAP
- SB — TEMPORARY SEDIMENT BASIN

Phase I Erosion Control Quantities*

Item	Unit	Quantity
SILT FENCE	L.F.	5195
SAFETY FENCE	L.F.	1990
DIVERSION DIKE	L.F.	1050
CONSTRUCTION ENTRANCE	EA.	1
CULVERT INLET PROTECTION	EA.	5
SEDIMENT TRAP	EA.	2

*CONTRACTOR TO DETERMINE ACTUAL QUANTITIES.

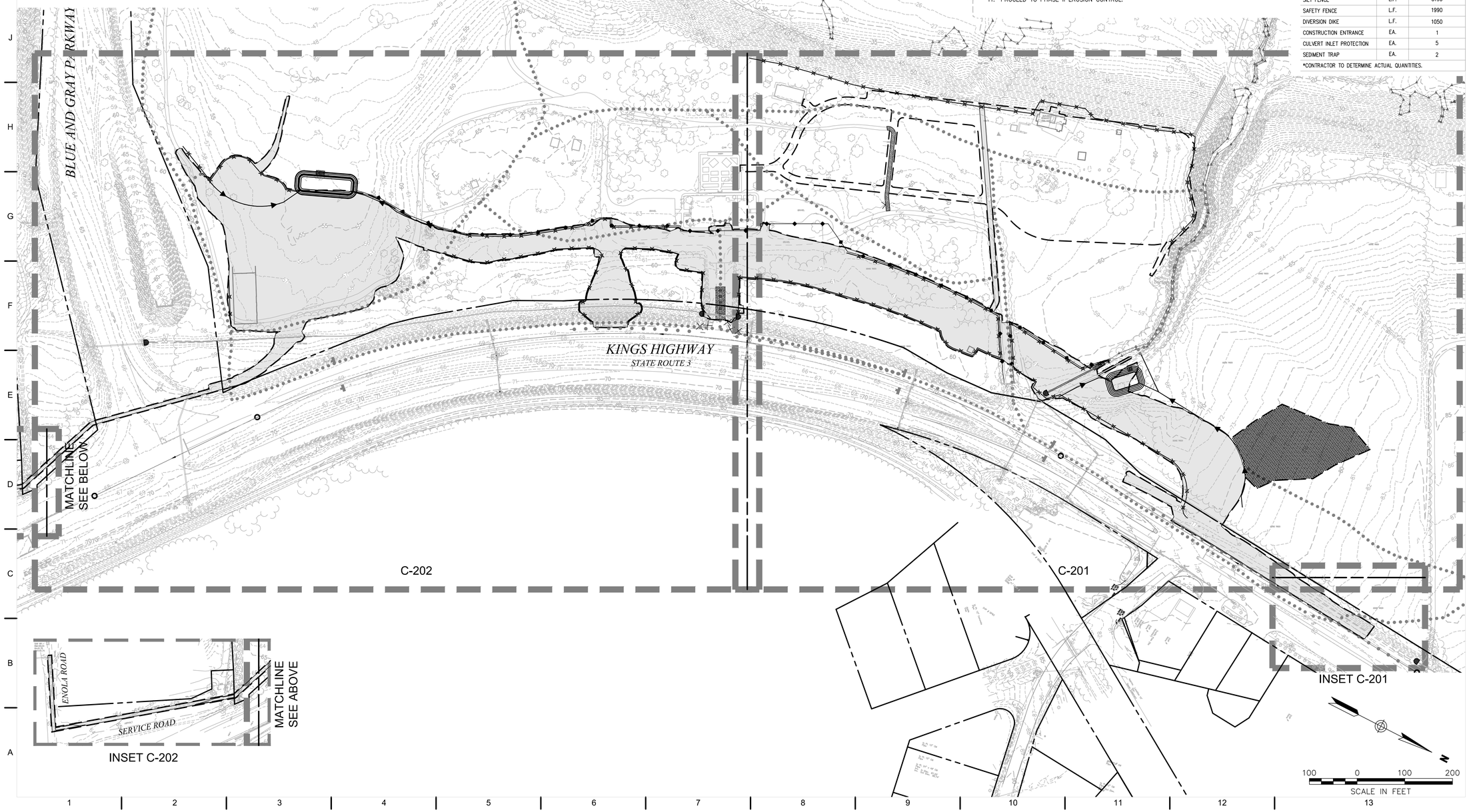

QUINN EVANS ARCHITECTS

2121 WARD PLACE, NW
FOURTH FLOOR
WASHINGTON, DC 20036

v 202 298 6700
f 202 298 6666

WWW.QUINNEVANS.COM

vhb

115 SOUTH 15TH STREET
SUITE 200
RICHMOND, VIRGINIA 23219

804.343.7100 | FAX 804.343.1713

FERRY FARM PHASE 1 IMPROVEMENTS

268 Kings Hwy,
Fredericksburg, VA
22405

QEA # 31402900

Overall Demolition & Erosion Control Plan Phase I

COMMONWEALTH OF VIRGINIA
JOHN P. FARTY
Lic. No. 039452
12/19/14
PROFESSIONAL ENGINEER

SITE PERMIT SUBMISSION
12/19/14

REVISIONS

NO.	DESCRIPTION	DATE

C-200

12/9/2014 5:09:41 PM I:\WBPROJ\RICHMOND\37912.07 QEA FERRY FARM PHASE I\CAD\LDP\LANSET\37912-07.DWG

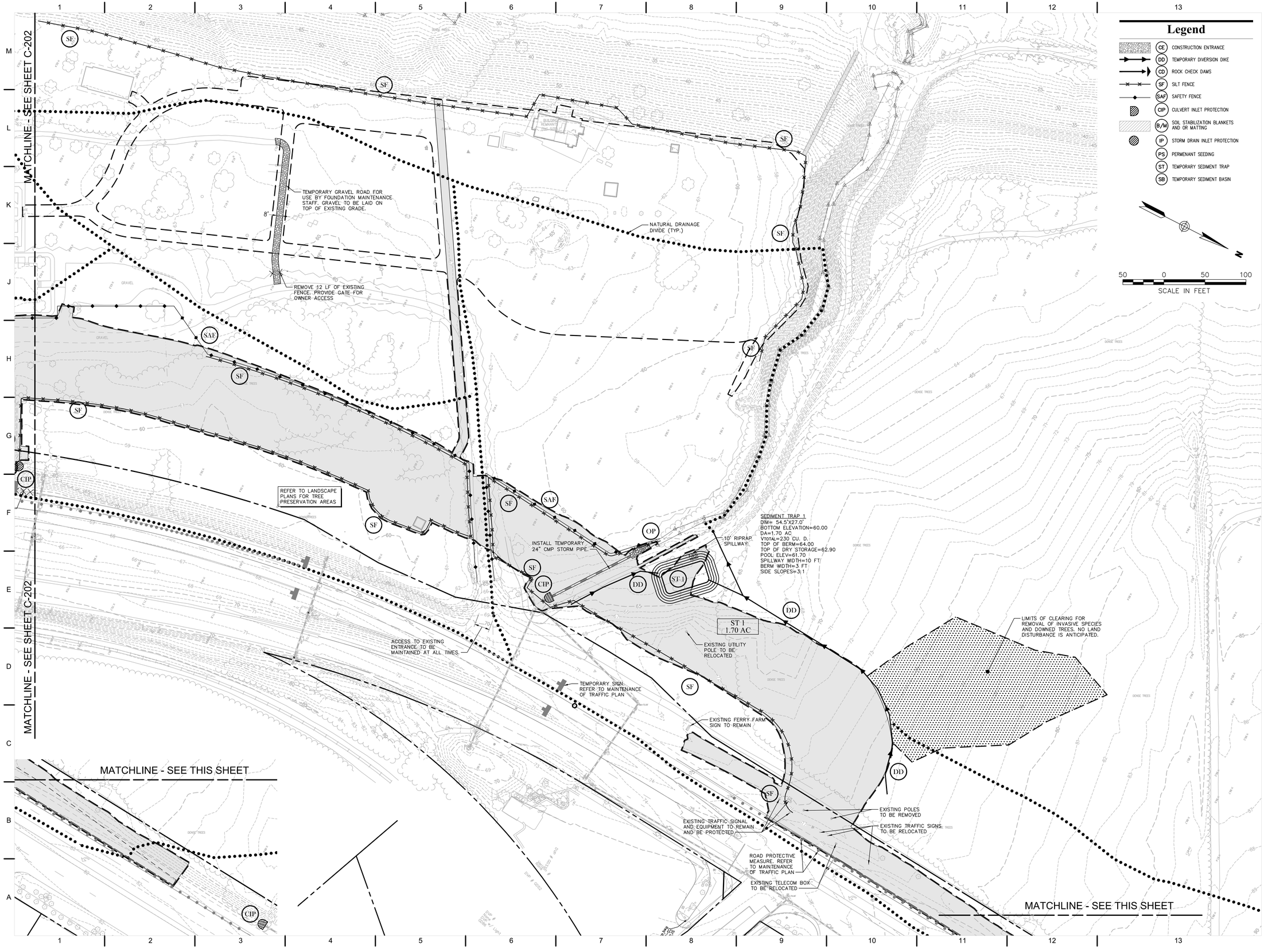

QUINN EVANS ARCHITECTS
2121 WARD PLACE, NW
FOURTH FLOOR
WASHINGTON, DC 20036
v 202 298 6700
f 202 298 6666
WWW.QUINNEVANS.COM

vhb
115 SOUTH 15TH STREET
SUITE 200
RICHMOND, VIRGINIA 23219
804.343.7100 | FAX 804.343.1713

FERRY FARM PHASE 1 IMPROVEMENTS

268 Kings Hwy, Fredericksburg, VA 22405

QEA # 31402900

Demolition & Erosion Control Plan Phase I

COMMONWEALTH OF VIRGINIA
JOHN P. CARTY
Lic. No. 039452
12/19/14
PROFESSIONAL ENGINEER

SITE PERMIT SUBMISSION
12/19/14

REVISIONS

NO.	DESCRIPTION	DATE

C-201

QUINN EVANS ARCHITECTS

2121 WARD PLACE, NW
FOURTH FLOOR
WASHINGTON, DC 20036

v 202 298 6700
f 202 298 6666

WWW.QUINNEVANS.COM

vhb

115 SOUTH 15TH STREET
SUITE 200
RICHMOND, VIRGINIA 23219

804.343.7100 | FAX 804.343.1713

FERRY FARM PHASE 1 IMPROVEMENTS

268 Kings Hwy, Fredericksburg, VA 22405

QEA # 31402900

Demolition & Erosion Control Plan Phase I

COMMONWEALTH OF VIRGINIA
JOHN P. CARTY
Lic. No. 039452
12/19/14
PROFESSIONAL ENGINEER

SITE PERMIT SUBMISSION
12/19/14

REVISIONS

NO.	DESCRIPTION	DATE

C-202

12/9/2014 5:09:41 PM \\VHBPROJ\RICHMOND\37912.07 QEA FERRY FARM PHASE I\CAD\LDP\LANSET\37912.07-DM

Sequence of Construction

THE FOLLOWING OUTLINES THE GENERAL CONSTRUCTION SEQUENCE THAT WILL BE EMPLOYED DURING THE SITE CONSTRUCTION PHASE.

1. UPON COMPLETION OF DEMOLITION ACTIVITIES, COMMENCE ROUGH GRADING OPERATIONS. PHASE I EROSION CONTROL MEASURES ARE TO REMAIN, UNLESS OTHERWISE NOTED. NO EROSION CONTROL MEASURES MAY BE REMOVED WITHOUT APPROVAL OF THE ENVIRONMENTAL INSPECTOR.
2. ANY CHANGES IN FENCE LAYOUTS OR ADJUSTMENTS TO THE PLANS AS SHOWN WILL REQUIRE APPROVAL FROM THE ENGINEER AND OWNER.
3. PROCEED WITH THE INSTALLATION OF UNDERGROUND UTILITIES. OFFSITE SANITARY SEWER INSTALLATION AND BORING TO BE COORDINATED WITH VDOT.
4. BUILDING PAD INSTALLATION MAY BEGIN.
5. INSTALL STORM SEWER DRAINAGE SYSTEM. APPLY INLET PROTECTION AND OTHER ESC MEASURES SHOWN ON THE PLANS AS NECESSARY.
6. STORM DRAINAGE AT THE SOUTH OF THE SITE IS TO CONTINUE TO BE ROUTED TO THE PHASE I SEDIMENT TRAP UNTIL THE TRAP MAY BE REMOVED. ONCE REMOVED, ROUTE DRAINAGE TO THE BIORETENTION BASIN AS SHOWN IN THE PLANS.
7. PLACE COMPACTED FILL AS REQUIRED TO ROUGH GRADE PAVED AREAS. CONTINUE TO FINE GRADE AND PLACE AGGREGATE BASE AND SUBBASE.
8. INSTALL ASPHALT PAVING.
9. ADD TOPSOIL, SEED, AND MULCH TO REMAINING DISTURBED AREAS. INSTALL LANDSCAPING TO FINISHED AREAS OF SITE. REFER TO LANDSCAPE PLANS.
10. REMOVE THE EXISTING EGRESS ROAD AND GRADE AS SHOWN IN PLANS.
11. LANDSCAPE EXISTING EGRESS ROAD AND RIGHT OF WAY BUFFER BETWEEN EXISTING ENTRANCE AND PROPOSED ENTRANCE AT FERRY ROAD.
12. REMOVE ANY REMAINING TEMPORARY EROSION AND SEDIMENT CONTROL MEASURES AFTER FINAL SITE STABILIZATION AND UPON APPROVAL OF ENVIRONMENTAL INSPECTOR.

Phase II Erosion Control Quantities*

Item	Unit	Quantity
SILT FENCE	L.F.	995
SAFETY FENCE	L.F.	0
DIVERSION DIKE	L.F.	0
ROCK CHECK DAMS	EA.	7
CULVERT INLET PROTECTION	EA.	12
OUTLET PROTECTION	EA.	5

*CONTRACTOR TO DETERMINE ACTUAL QUANTITIES.

Legend

- CE — CONSTRUCTION ENTRANCE
- DD — TEMPORARY DIVERSION DIKE
- CD — ROCK CHECK DAMS
- SF — SILT FENCE
- SAF — SAFETY FENCE
- CIP — CULVERT INLET PROTECTION
- B/M — SOIL STABILIZATION BLANKETS AND OR MATTING
- IP — STORM DRAIN INLET PROTECTION
- PS — PERMENANT SEEDING
- ST — TEMPORARY SEDIMENT TRAP
- SB — TEMPORARY SEDIMENT BASIN

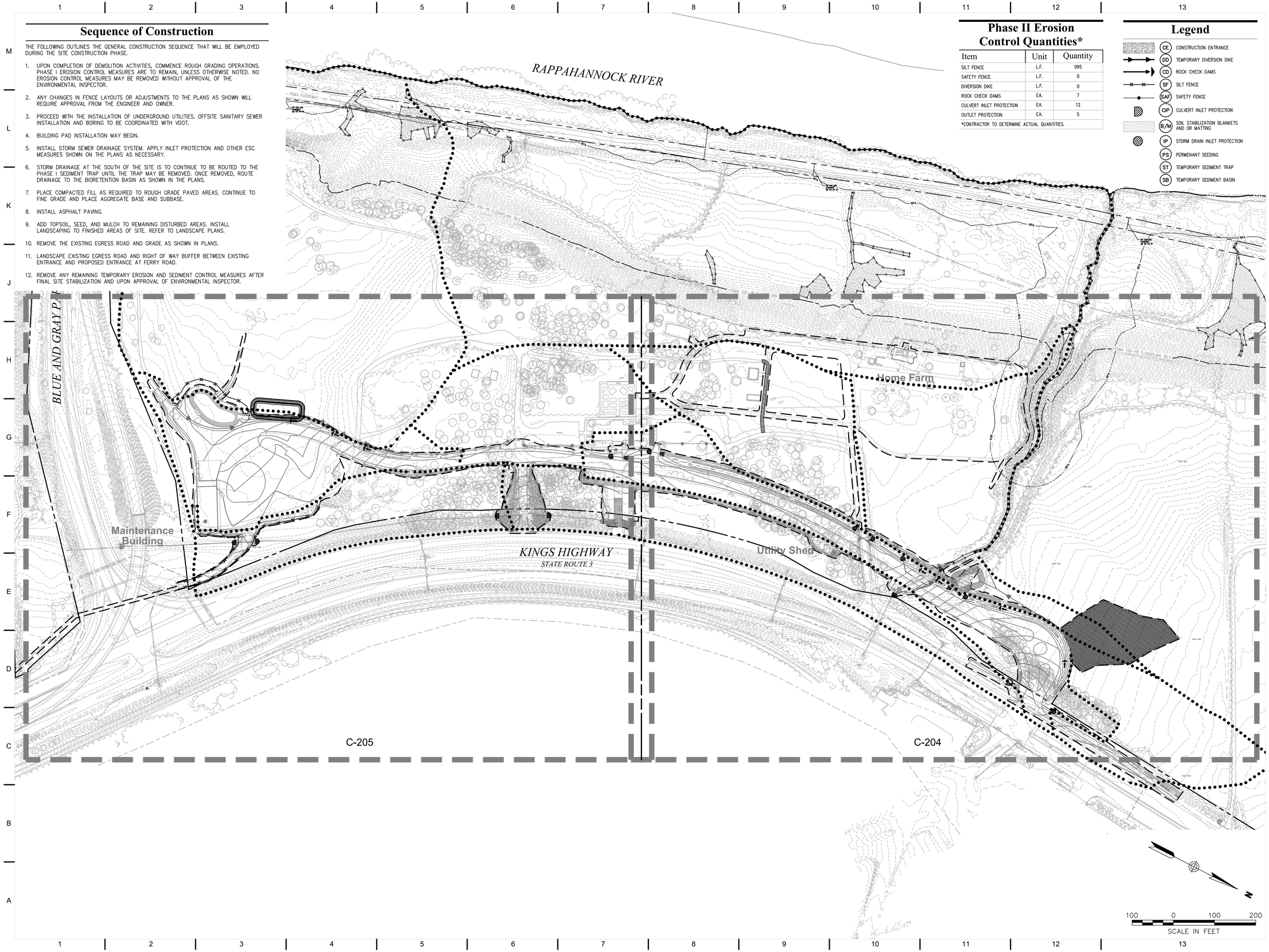

QUINN EVANS ARCHITECTS

2121 WARD PLACE, NW
FOURTH FLOOR
WASHINGTON, DC 20036

v 202 298 6700
f 202 298 6666

WWW.QUINNEVANS.COM

vhb

115 SOUTH 15TH STREET
SUITE 200
RICHMOND, VIRGINIA 23219

804.343.7100 | FAX 804.343.1713

FERRY FARM PHASE 1 IMPROVEMENTS

268 Kings Hwy, Fredericksburg, VA 22405

QEA # 31402900

Overall Erosion Control Plan Phase II

COMMONWEALTH OF VIRGINIA
JOHN P. FORTY
Lic. No. 039452
12/19/14
PROFESSIONAL ENGINEER

SITE PERMIT SUBMISSION
12/19/14

REVISIONS

NO.	DESCRIPTION	DATE

C-203

12/19/2014 5:09:41 PM \\VHBPROJ\RICHMOND\37912.07 QEA FERRY FARM PHASE I\CAD\LDP\LANSET\37912.07-ER

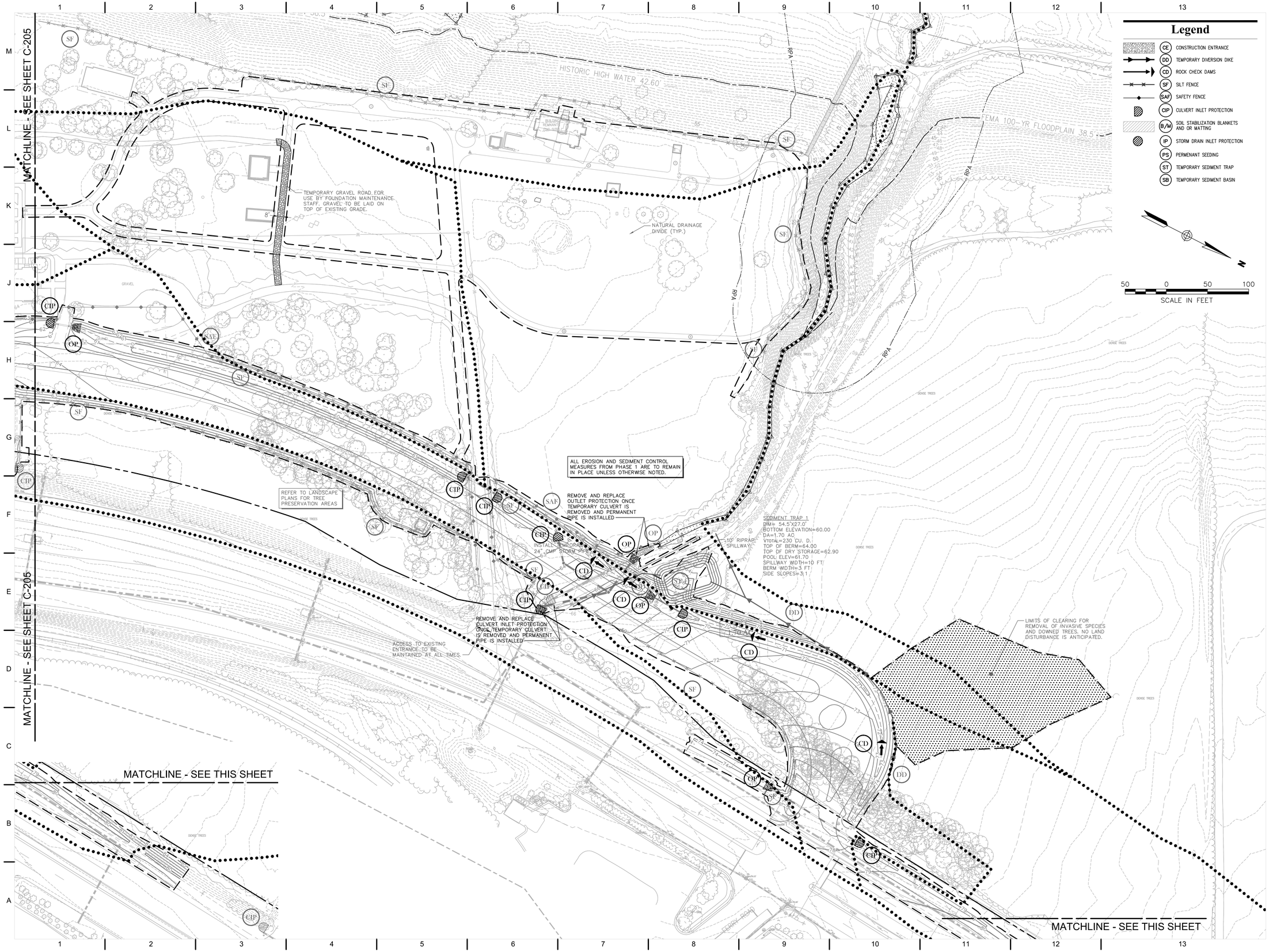

QUINN EVANS ARCHITECTS
2121 WARD PLACE, NW
FOURTH FLOOR
WASHINGTON, DC 20036
v 202 298 6700
f 202 298 6666
WWW.QUINNEVANS.COM

vhb
115 SOUTH 15TH STREET
SUITE 200
RICHMOND, VIRGINIA 23219
804.343.7100 | FAX 804.343.1713

FERRY FARM PHASE 1 IMPROVEMENTS

268 Kings Hwy, Fredericksburg, VA 22405

QEA # 31402900

Erosion Control Plan Phase II

COMMONWEALTH OF VIRGINIA
JOHN P. CARTY
Lic. No. 039452
12/19/14
PROFESSIONAL ENGINEER

SITE PERMIT SUBMISSION
12/19/14

REVISIONS

NO.	DESCRIPTION	DATE

C-204

12/9/2014 5:09:41 PM \\VHBPROJ\RICHMOND\37912.07 QEA FERRY FARM PHASE I\CAD\LDP\PLANSET\37912.07-ER

QUINN EVANS ARCHITECTS

2121 WARD PLACE, NW
FOURTH FLOOR
WASHINGTON, DC 20036

v 202 298 6700
f 202 298 6666

WWW.QUINNEVANS.COM

vhb

115 SOUTH 15TH STREET
SUITE 200
RICHMOND, VIRGINIA 23219

804.343.7100 | FAX 804.343.1713

FERRY FARM PHASE 1 IMPROVEMENTS

268 Kings Hwy, Fredericksburg, VA 22405

QEA # 31402900

Erosion Control Plan Phase II

COMMONWEALTH OF VIRGINIA
JOHN P. CARTY
Lic. No. 039452
12/19/14
PROFESSIONAL ENGINEER

SITE PERMIT SUBMISSION
12/19/14

REVISIONS

NO.	DESCRIPTION	DATE

C-205

12/19/2014 5:09:41 PM I:\VHB\PROJ\RICHMOND\37912.07 QEA FERRY FARM PHASE I\CAD\LDP\LANSET\37912.07\LER

Erosion Control Construction Narrative

Project Description and Schedule

VANASSE HANGEN BRUSTLIN, INC. HAS BEEN RETAINED BY QUINN EVANS ARCHITECTS AND THE GEORGE WASHINGTON FOUNDATION TO PREPARE CONSTRUCTION DRAWINGS FOR IMPROVEMENTS TO THE FERRY FARM SITE. THE PROPOSED CONSTRUCTION FOR PHASE 1 INCLUDES AN APPROXIMATELY 2,400 FOOT LONG ENTRY ROAD LEADING TO THE MAINTENANCE AND OPERATIONS AREA FOR THE SITE, AND THE RECONSTRUCTION OF GEORGE WASHINGTON'S BOYHOOD HOME. THE PROPOSED INTERSECTION WITH KINGS HIGHWAY (STATE ROUTE 3) WILL WARRANT A RIGHT TURN LANE. THIS ROAD CONSTRUCTION INCLUDES WATER LINE, ELECTRIC, TELECOM AND OFFSITE SANITARY SEWER CONNECTIONS. ALSO INCLUDED IS A 3,600 SF MAINTENANCE BUILDING.

THE PROPOSED DEVELOPMENT IS LOCATED ON THE FERRY FARM SITE, ALSO KNOWN AS GEORGE WASHINGTON'S BOYHOOD HOME, IN STAFFORD COUNTY. THE SITE IS LOCATED AT THE NORTHWEST INTERSECTION OF KINGS HIGHWAY (STATE ROUTE 3) AND THE BLUE GRAY PARKWAY (STATE ROUTE 3 BYPASS).

THE PROPOSED SITE DISTURBED AREA ACREAGE IS 5.68 ACRES. THE EXISTING TOPSOIL LAYER SHALL BE STRIPPED AND DISTRIBUTED THROUGHOUT THE SITE.

Objective of the Erosion and Sediment Control Plan

THE OBJECTIVE OF THIS EROSION AND SEDIMENT CONTROL PLAN IS TO ESTABLISH SPECIFIC GUIDELINES FOR CONTROLLING SOIL EROSION AND SEDIMENTATION DURING AND AFTER THE CLEARING, GRUBBING, AND MASS EXCAVATION ASSOCIATED WITH PREPARATION OF THE SITE FOR BUILDING CONSTRUCTION. MOREOVER, THIS PLAN SPECIFIES THE CONTROL MEASURES THAT WILL BE EMPLOYED TO PROVIDE A PRACTICAL AND WORKABLE MEANS OF MINIMIZING DETRIMENTAL IMPACTS TO SOILS AND WATER RESOURCES AS A RESULT OF THE CONSTRUCTION ACTIVITIES. ALL MEASURES ARE DESIGNED IN ACCORDANCE WITH THE VIRGINIA EROSION AND SEDIMENT CONTROL HANDBOOK, THIRD EDITION, 1992.

Existing Conditions / General Description

MOST OF THE SITE IS CURRENTLY LAWN AND VEGETATED AREA. IN THE CENTER OF THE SITE IS THE EXISTING VISITORS CENTER WITH TWO SMALL PARKING LOTS ON THE NORTH AND SOUTH SIDE AND A GARDEN ON THE WEST SIDE, ALL OF WHICH WILL REMAIN. THERE IS ALSO A GRAVEL ENTRANCE AND EXIT ROAD THAT WILL BE REMOVED WITH THE CONSTRUCTION.

TOPOGRAPHY ON THE SITE GENERALLY SLOPES FROM EAST TO WEST INTO THE RAPPAHANNOCK RIVER. THERE IS A WIDE PLATEAU ON THE EASTERN SIDE OF THE SITE WHERE ALL OF THE DEVELOPMENT IS PROPOSED. TOPOGRAPHY IN THE PLATEAU IS GENERALLY FLAT WITH SLOPES 0–6% BETWEEN THE RIVER AND THE PLATEAU IS A STEEP CLIFFSIDE WHICH SLOPES AT 33% FROM AN ELEVATION OF APPROXIMATELY 62' TO APPROXIMATELY 30'.

Clearing / Grubbing

THIS SITE REQUIRES CLEARING AND GRUBBING, THE LIMITS OF WHICH ARE SHOWN ON THE EROSION CONTROL PLANS. THIS LIMIT WAS ESTABLISHED OUTSIDE THE AREAS TO BE GRADED AND OUTSIDE OF ANY AREAS DESIGNATED AS TREE PROTECTION AREAS. THE AREAS DESIGNATED WITH TREE PROTECTION SHOULD NOT BE IMPACTED BY CONSTRUCTION ACTIVITIES AT ANY TIME DURING THE PROJECT CONSTRUCTION. THIS INCLUDES CONSTRUCTION WORKER AND EQUIPMENT PARKING.

ANY DEMOLISHED MATERIALS FROM THE SITE WILL BE REMOVED FROM THE SITE AND DISPOSED OF AT A CERTIFIED LANDFILL OR RECYCLED (THIS DOES NOT INCLUDE MATERIAL FROM THE BUILDING RENOVATION). EXCAVATED SOIL WILL BE STORED ON SITE IN THE LOCATION SHOWN ON THE PLANS OR REMOVED FROM THE SITE AND DISPOSED OF AT A CERTIFIED LANDFILL.

Adjacent Property

THE SITE IS BORDERED TO THE WEST BY THE RAPPAHANNOCK RIVER. TO THE EAST BY THE KINGS HIGHWAY (STATE ROUTE 3) AND TO THE SOUTH BY THE BLUE GRAY PARKWAY (STATE ROUTE 3 BYPASS). TO THE NORTH OF THE SITE IS A NATURAL RAVINE AND A SMALL RESIDENTIAL AREA ON JETT DRIVE.

Off-Site Areas

SOME OFFSITE LAND DISTURBANCE IS PROPOSED WITHIN THE VDOT RIGHT OF WAY OF KINGS HIGHWAY.

TWO NEW INTERSECTIONS ARE PROPOSED ON KINGS HIGHWAY. THE MAIN ENTRANCE OF THE SITE WILL SHIFT TO THE EXISTING INTERSECTION OF FERRY ROAD AND KINGS HIGHWAY, ADDING A FOURTH LEG TO THE INTERSECTION. FURTHER SOUTH, AN EMERGENCY EGRESS ROAD WILL ALSO INTERSECT KINGS HIGHWAY. BOTH EXISTING INTERSECTIONS WILL BE REMOVED WITH THIS DEVELOPMENT.

OFFSITE SANITARY SEWER IMPROVEMENTS ARE ALSO PROPOSED TO THE SOUTH OF THE SITE, A NEW SANITARY SEWER PIPE WILL BE BORED UNDER BLUE GRAY PARKWAY. IT WILL THEN RUN ALONG THE WESTERN SIDE OF KINGS HIGHWAY BEFORE CONNECTING TO AN EXISTING MANHOLE IN ENOLA ROAD.

Soils

THE NATURAL RESOURCES CONSERVATION SERVICE SOILS MAP SHOWS THE SITE'S SOIL TYPES TO BE:

Ad	– ALLUVIAL LAND – SANDY AND GRAVELLY – HSG D
AfA, AfC2	– ALTAVISTA FINE SANDY LOAM – 0 TO 2 (AfA), AND 6 TO 10 (AfC2) PERCENT SLOPES – HSG C
AwD, AwE	– AURA-GALESTOWN-SASSAFRAS COMPLEX – 6 TO 15 (AwD), AND 15 TO 30 (AwE) PERCENT SLOPES – HSG A
Cw	– CUT AND FILL LAND – HSG D
DoB	– DOGUE LOAM – 2 TO 6 PERCENT SLOPES – HSG C
Sa	– SAND AND GRAVEL PITS – HSG D
Wa	– WAHEE SILT LOAM – HSG D
WmA, WmB, WmC2	– WICKHAM FINE SANDY LOAM – 0 TO 2 (WmA), 2 TO 6 (WmB), AND 6 TO 12 (WmC2) PERCENT SLOPES – HSG B

Critical Areas

STEEP SLOPES AND POOR SOILS EXIST ON THIS SITE; HOWEVER, THESE AREAS ARE NOT BEING DISTURBED DURING CONSTRUCTION. THE SITE ALSO ABUTS THE RAPPAHANOCK RIVER WHICH WILL BE PROTECTED WITH EROSION CONTROL MEASURES WHERE NECESSARY.

WETLANDS HAVE BEEN LOCATED ON THE SITE ADJACENT TO THE RIVER AND WITHIN THE RAVINE TO THE NORTH OF THE DEVELOPMENT.

ACCORDING TO THE FEDERAL EMERGENCY MANAGEMENT (FEMA) FLOOD INSURANCE RATE MAP, THE RAPPAHANOCK RIVER FLOODWAY IS ALONG THE WEST SIDE OF THE SITE AND THE 100-YEAR FLOOD PLAIN FOR THE RAPPAHANOCK RIVER IS AT AN ELEVATION OF 38.5'. NO WORK IS PROPOSED WITHIN THE FLOODWAY OR THE FLOODPLAIN.

Permanent Stabilization

ALL NON-IMPERVIOUS AREAS REMAINING SHALL BE SEEDED WITH PERENNIAL GRASSES OR LEGUMES. ESTABLISHMENT OF PERMANENT VEGETATIVE COVER MAY BE ESTABLISHED BY HYDRO-SEEDING. A SUITABLE TOPSOIL, GOOD SEEDBED PREPARATION, AND ADEQUATE LIME, FERTILIZER AND WATER SHALL BE PROVIDED FOR EFFECTIVE ESTABLISHMENT OF THESE VEGETATIVE STABILIZATION METHODS. STRAW MULCH SHALL BE USED AFTER PERMANENT SEEDING TO PROTECT SOIL DURING SEED ESTABLISHMENT. PERMANENT SEEDING SHALL CONFORM TO VESCH STANDARD AND SPECIFICATION 3.32, PIEDMONT REGION.

Maintenance of Erosion and Sediment Control Facilities

ALL MAINTENANCE OF TEMPORARY AND PERMANENT EROSION AND SEDIMENT CONTROL FACILITIES SHALL BE CARRIED OUT IN ACCORDANCE WITH SECTION 1.7 OF THE VIRGINIA EROSION AND SEDIMENT CONTROL REGULATIONS (VR 625-02-00). DURING THE PERIOD THAT THE PROJECT SITE IS UNDER CONSTRUCTION, THE CONTRACTOR WILL BE RESPONSIBLE FOR MAINTENANCE OF THE EROSION AND SEDIMENT CONTROL FACILITIES. THE CONTRACTOR WILL INSPECT EROSION AND SEDIMENT CONTROL FACILITIES ON A REGULAR BASIS, ESPECIALLY AFTER PERIODS OF HEAVY RAINFALL. ANY DAMAGE DISCOVERED WILL BE REPAIRED PROMPTLY BY THE CONTRACTOR. THE CONTRACTOR SHALL MAINTAIN RECORDS OF THESE INSPECTIONS AND MAINTENANCE, TO ENSURE COMPLIANCE WITH THE APPROVED PLAN. FURTHERMORE, A READILY AVAILABLE SUPPLY OF EROSION AND SEDIMENT CONTROL MATERIALS WILL BE MAINTAINED BY THE CONTRACTOR AT ALL TIMES.

Stormwater Management Runoff

DURING CLEARING, GRUBBING, AND MASS GRADING, STORMWATER RUNOFF WILL SHEET FLOW INTO SHALLOW SWALES AND DIRECTED TOWARDS TEMPORARY SEDIMENT TRAPS AND PERIMETER CONTROLS SUCH AS SILT FENCE. THROUGH THESE MEASURES THE RUNOFF WILL BE FILTERED PRIOR TO RELEASE INTO AN EXISTING VDOT DRAINAGE CHANNEL, THE EXISTING RAVINE, OR THE RAPPAHANNOCK RIVER.

Final Site Clean Up

NO EROSION AND SEDIMENT CONTROL MEASURES CAN BE REMOVED WITHOUT APPROVAL OF THE ENVIRONMENTAL INSPECTOR FOR THE PROJECT. ALL TEMPORARY EROSION AND SEDIMENT CONTROL MEASURES WILL BE REMOVED ONLY WHEN ALL PREVIOUSLY DENUDED AREAS PROTECTED BY DEVICES HAVE BECOME STABILIZED. THE STONE AND/OR ROCK USED AT CONSTRUCTION ENTRANCES AND ANY OTHER LOCATION ON THE SITE WILL BE REMOVED AND DISPOSED OF IN THE APPROPRIATE MANNER. THE SILT FENCES USED ALONG THE LIMITS OF WORK WILL BE REMOVED IF VEGETATIVE COVER AND SLOPE STABILITY HAVE BEEN ATTAINED.

General Erosion and Sediment Control Notes

ES-1: UNLESS OTHERWISE INDICATED, ALL VEGETATIVE AND STRUCTURAL EROSION AND SEDIMENT CONTROL PRACTICES WILL BE CONSTRUCTED AND MAINTAINED ACCORDING TO MINIMUM STANDARDS AND SPECIFICATIONS OF THE VIRGINIA EROSION AND SEDIMENT CONTROL HANDBOOK AND VIRGINIA REGULATIONS 9VAC25-840 EROSION AND SEDIMENT CONTROL REGULATIONS.

ES-2: THE PLAN APPROVING AUTHORITY MUST BE NOTIFIED ONE WEEK PRIOR TO THE PRE-CONSTRUCTION CONFERENCE, ONE WEEK PRIOR TO THE COMMENCEMENT OF LAND DISTURBING ACTIVITY, AND ONE WEEK PRIOR TO THE FINAL INSPECTION.

ES-3: ALL EROSION AND SEDIMENT CONTROL MEASURES ARE TO BE PLACED PRIOR TO OR AS THE FIRST STEP IN CLEARING.

ES-4: A COPY OF THE APPROVED EROSION AND SEDIMENT CONTROL PLAN SHALL BE MAINTAINED ON THE SITE AT ALL TIMES.

ES-5: PRIOR TO COMMENCING LAND DISTURBING ACTIVITIES IN AREAS OTHER THAN INDICATED ON THESE PLANS (INLCUDING, BUT NOT LIMITED TO, OFF-SITE BORROW OR WASTE AREAS), THE CONTRACTOR SHALL SUBMIT A SUPPLEMENTARY EROSION CONTROL PLAN TO THE OWNER FOR REVIEW AND APPROVAL BY THE PLAN APPROVING AUTHORITY.

ES-6: THE CONTRACTOR IS RESPONSIBLE FOR INSTALLATION OF ANY ADDITIONAL EROSION CONTROL MEASURES NECESSARY TO PREVENT EROSION AND SEDIMENTATION AS DETERMINED BY THE PLAN APPROVING AUTHORITY.

ES-7: ALL DISTURBED AREAS ARE TO DRAIN TO APPROVED SEDIMENT CONTROL MEASURES AT ALL TIMES DURING LAND DISTURBING ACTIVITIES AND DURING SITE DEVELOPMENT UNTIL FINAL STABILIZATION IS ACHIEVED.

ES-8: DURING DEWATERING OPERATIONS, WATER WILL BE PUMPED INTO AN APPROVED FILTERING DEVICE.

ES-9: THE CONTRACTOR SHALL INSPECT ALL EROSION CONTROL MEASURES PERIODICALLY AND AFTER EACH RUNOFF-PRODUCING RAINFALL EVENT. ANY NECESSARY REPAIRS OR CLEANUP TO MAINTAIN THE EFFECTIVENESS OF THE EROSION CONTROL DEVICES SHALL BE MADE IMMEDIATELY.

ES-10: THE CONTRACTOR IS RESPONSIBLE FOR THE DAILY REMOVAL OF SEDIMENT THAT HAS BEEN TRANSPORTED ONTO A PAVED OR PUBLIC ROAD SURFACE.

ES-11: SEEDING OPERATIONS SHALL BE INITIATED WITHIN 7 DAYS AFTER REACHING FINAL GRADE OR UPON SUSPENSION OF GRADING OPERATIONS FOR ANTICIPATED DURATION OF GREATER THAN 14 DAYS OR UPON COMPLETION OF GRADING OPERATIONS FOR A SPECIFIC AREA.

ES-12: THE CONTRACTOR SHALL BE RESPONSIBLE FOR PREVENTING SURFACE AND AIR MOVEMENT OF DUST FROM EXPOSED SOILS WHICH MAY PRESENT HEALTH HAZARDS, TRAFFIC SAFETY PROBLEMS, OR HARM ANIMAL OR PLANT LIFE.

ES-13: A VIRGINIA STORMWATER MANAGEMENT PROGRAM PERMIT (VSMPP) FOR THE DISCHARGE OF STORMWATER FROM CONSTRUCTION ACTIVITIES IS REQUIRED FOR PROJECTS DISTURBING 1 ACRE OR GREATER. A VSMPP IS ALSO REQUIRED FOR PROJECTS DISTURBING 2,500 S.F. OR GREATER IN A DESIGNATED CHESAPEAKE BAY PRESERVATION AREA. SEE http://www.deq.virginia.gov/Programs/Water/StormwaterManagement/VSMPPermits.aspx FOR MORE INFORMATION.

A VIRGINIA STORMWATER MANAGEMENT PROGRAM (VSMP) PERMIT FOR THE DISCHARGE OF STORMWATER FROM CONSTRUCTION ACTIVITIES IS REQUIRED FOR THIS PROJECT. THE MAIN REQUIREMENT OF THE VSMP PERMIT IS THE PREPARATION OF A STORMWATER POLLUTION PREVENTION PLAN (SWPPP). THE SWPPP MUST BE PREPARED BEFORE CONSTRUCTION ACTIVITIES BEGIN AND BE KEPT ON SITE AT ALL TIMES.

MS-19 Standards

AN EROSION AND SEDIMENT CONTROL PROGRAM ADOPTED BY A DISTRICT OR LOCALITY MUST BE CONSISTENT WITH THE FOLLOWING CRITERIA, TECHNIQUES AND METHODS:

1. PERMANENT OR TEMPORARY SOIL STABILIZATION SHALL BE APPLIED TO DENUDED AREAS WITHIN SEVEN DAYS AFTER FINAL GRADE IS REACHED ON ANY PORTION OF THE SITE. TEMPORARY SOIL STABILIZATION SHALL BE APPLIED WITHIN SEVEN DAYS TO DENUDED AREAS THAT MAY NOT BE AT FINAL GRADE BUT WILL REMAIN DORMANT FOR LONGER THAN 14 DAYS. PERMANENT STABILIZATION SHALL BE APPLIED TO AREAS THAT ARE TO BE LEFT DORMANT FOR MORE THAN ONE YEAR.

2. DURING CONSTRUCTION OF THE PROJECT, SOIL STOCKPILES AND BORROW AREAS SHALL BE STABILIZED OR PROTECTED WITH SEDIMENT TRAPPING MEASURES. THE APPLICANT IS RESPONSIBLE FOR THE TEMPORARY PROTECTION AND PERMANENT STABILIZATION OF ALL SOIL STOCKPILES ON SITE AS WELL AS BORROW AREAS AND SOIL INTENTIONALLY TRANSPORTED FROM THE PROJECT SITE.

3. A PERMANENT VEGETATIVE COVER SHALL BE ESTABLISHED ON DENUDED AREAS NOT OTHERWISE PERMANENTLY STABILIZED. PERMANENT VEGETATION SHALL NOT BE CONSIDERED ESTABLISHED UNTIL A GROUND COVER IS ACHIEVED THAT, IS UNIFORM, MATURE ENOUGH TO SURVIVE AND WILL INHIBIT EROSION.

4. SEDIMENT BASINS AND TRAPS, PERIMETER DIKES, SEDIMENT BARRIERS AND OTHER MEASURES INTENDED TO TRAP SEDIMENT SHALL BE CONSTRUCTED AS A FIRST STEP IN ANY LAND DISTURBING ACTIVITY AND SHALL BE MADE FUNCTIONAL BEFORE UPSLOPE LAND DISTURBANCE TAKES PLACE.

5. STABILIZATION MEASURES SHALL BE APPLIED TO EARTHEN STRUCTURES SUCH AS DAMS, DIKES AND DIVERSIONS IMMEDIATELY AFTER INSTALLATION.

6. SEDIMENT TRAPS AND SEDIMENT BASINS SHALL BE DESIGNED AND CONSTRUCTED BASED UPON THE TOTAL DRAINAGE AREA TO BE SERVED BY THE TRAP OR BASIN.

   a. THE MINIMUM STORAGE CAPACITY OF A SEDIMENT TRAP SHALL BE 134 CUBIC YARDS PER ACRE OF DRAINAGE AREA AND THE TRAP SHALL ONLY CONTROL DRAINAGE AREAS LESS THAN THREE ACRES.

   b. SURFACE RUNOFF FROM DISTURBED AREAS THAT IS COMPRISED OF FLOW FROM DRAINAGE AREAS GREATER THAN OR EQUAL TO THREE ACRES SHALL BE CONTROLLED BY A SEDIMENT BASIN. THE MINIMUM STORAGE CAPACITY OF A SEDIMENT BASIN SHALL BE 134 CUBIC YARDS PER ACRE OF DRAINAGE AREA. THE OUTFALL SYSTEM SHALL, AT A MINIMUM, MAINTAIN THE STRUCTURAL INTEGRITY OF THE BASIN DURING A TWENTY-FIVE YEAR STORM OF 24-HOUR DURATION. RUNOFF COEFFICIENTS USED IN RUNOFF CALCULATIONS SHALL CORRESPOND TO A BARE EARTH CONDITION OR THOSE CONDITIONS EXPECTED TO EXIST WHILE THE SEDIMENT BASIN IS UTILIZED.

7. CUT AND FILL SLOPES SHALL BE DESIGNED AND CONSTRUCTED IN A MANNER THAT WILL MINIMIZE EROSION. SLOPES THAT ARE FOUND TO BE ERODING EXCESSIVELY WITHIN ONE YEAR OF PERMANENT STABILIZATION SHALL BE PROVIDED WITH ADDITIONAL SLOPE STABILIZING MEASURES UNTIL THE PROBLEM IS CORRECTED.

8. CONCENTRATED RUNOFF SHALL NOT FLOW DOWN CUT OR FILL SLOPES UNLESS CONTAINED WITHIN AN ADEQUATE TEMPORARY OR PERMANENT CHANNEL, FLUME OR SLOPE DRAIN STRUCTURE.

9. WHENEVER WATER SEEPS FROM A SLOPE FACE, ADEQUATE DRAINAGE OR OTHER PROTECTION SHALL BE PROVIDED.

10. ALL STORM SEWER INLETS THAT ARE MADE OPERABLE DURING CONSTRUCTION SHALL BE PROTECTED SO THAT SEDIMENT-LADEN WATER CANNOT ENTER THE CONVEYANCE SYSTEM WITHOUT FIRST BEING FILTERED OR OTHERWISE TREATED TO REMOVE SEDIMENT.

11. BEFORE NEWLY CONSTRUCTED STORMWATER CONVEYANCE CHANNELS OR PIPES ARE MADE OPERATIONAL, ADEQUATE OUTLET PROTECTION AND ANY REQUIRED TEMPORARY OR PERMANENT CHANNEL LINING SHALL BE INSTALLED IN BOTH THE CONVEYANCE CHANNEL AND RECEIVING CHANNEL.

12. WHEN WORK IN A LIVE WATERCOURSE IS PERFORMED, PRECAUTIONS SHALL BE TAKEN TO MINIMIZE ENCROACHMENT, CONTROL SEDIMENT TRANSPORT AND STABILIZE THE WORK AREA TO THE GREATEST EXTENT POSSIBLE DURING CONSTRUCTION. NONERODIBLE MATERIAL SHALL BE USED FOR THE CONSTRUCTION OF CAUSEWAYS AND COFFERDAMS. EARTHEN FILL MAY BE USED FOR THESE STRUCTURES IF ARMORED BY NONERODIBLE COVER MATERIALS.

13. WHEN A LIVE WATERCOURSE MUST BE CROSSED BY CONSTRUCTION VEHICLES MORE THAN TWICE IN ANY SIX-MONTH PERIOD, A TEMPORARY VEHICULAR STREAM CROSSING CONSTRUCTED OF NONERODIBLE MATERIAL SHALL BE PROVIDED.

14. ALL APPLICABLE FEDERAL, STATE AND LOCAL REQUIREMENTS PERTAINING TO WORKING IN OR CROSSING LIVE WATERCOURSES SHALL BE MET.

15. THE BED AND BANKS OF A WATERCOURSE SHALL BE STABILIZED IMMEDIATELY AFTER WORK IN THE WATERCOURSE IS COMPLETED.

16. UNDERGROUND UTILITY LINES SHALL BE INSTALLED IN ACCORDANCE WITH THE FOLLOWING STANDARDS IN ADDITION TO OTHER APPLICABLE CRITERIA:

   a. NO MORE THAN 500 LINEAR FEET OF TRENCH MAY BE OPENED AT ONE TIME.

   b. EXCAVATED MATERIAL SHALL BE PLACED ON THE UPHILL SIDE OF TRENCHES.

   c. EFFLUENT FROM DEWATERING OPERATIONS SHALL BE FILTERED OR PASSED THROUGH AN APPROVED SEDIMENT TRAPPING DEVICE, OR BOTH, AND DISCHARGED IN A MANNER THAT DOES NOT ADVERSELY AFFECT FLOWING STREAMS OR OFF-SITE PROPERTY.

   d. MATERIAL USED FOR BACKFILLING TRENCHES SHALL BE PROPERLY COMPACTED IN ORDER TO MINIMIZE EROSION AND PROMOTE STABILIZATION.

   e. RESTABILIZATION SHALL BE ACCOMPLISHED IN ACCORDANCE WITH THIS CHAPTER.

   f. APPLICABLE SAFETY REQUIREMENTS SHALL BE COMPLIED WITH.

17. WHERE CONSTRUCTION VEHICLE ACCESS ROUTES INTERSECT PAVED OR PUBLIC ROADS, PROVISIONS SHALL BE MADE TO MINIMIZE THE TRANSPORT OF SEDIMENT BY VEHICULAR TRACKING ONTO THE PAVED SURFACE. WHERE SEDIMENT IS TRANSPORTED ONTO A PAVED OR PUBLIC ROAD SURFACE, THE ROAD SURFACE SHALL BE CLEANED THOROUGHLY AT THE END OF EACH DAY. SEDIMENT SHALL BE REMOVED FROM THE ROADS BY SHOVELING OR SWEEPING AND TRANSPORTED TO A SEDIMENT CONTROL DISPOSAL AREA. STREET WASHING SHALL BE ALLOWED ONLY AFTER SEDIMENT IS REMOVED IN THIS MANNER. THIS PROVISION SHALL APPLY TO INDIVIDUAL DEVELOPMENT LOTS AS WELL AS TO LARGER LAND-DISTURBING ACTIVITIES.

18. ALL TEMPORARY EROSION AND SEDIMENT CONTROL MEASURES SHALL BE REMOVED WITHIN 30 DAYS AFTER FINAL SITE STABILIZATION OR AFTER THE TEMPORARY MEASURES ARE NO LONGER NEEDED, UNLESS OTHERWISE AUTHORIZED BY THE LOCAL PROGRAM AUTHORITY. TRAPPED SEDIMENT AND THE DISTURBED SOIL AREAS RESULTING FROM THE DISPOSITION OF TEMPORARY MEASURES SHALL BE PERMANENTLY STABILIZED TO PREVENT FURTHER EROSION AND SEDIMENTATION.

19. PROPERTIES AND WATERWAYS DOWNSTREAM FROM DEVELOPMENT SITES SHALL BE PROTECTED FROM SEDIMENT DEPOSITION, EROSION AND DAMAGE DUE TO INCREASES IN VOLUME, VELOCITY AND PEAK FLOW RATE OF STORMWATER RUNOFF FOR THE STATED FREQUENCY STORM OF 24-HOUR DURATION IN ACCORDANCE WITH THE FOLLOWING STANDARDS AND CRITERIA. STREAM RESTORATION AND RELOCATION PROJECTS THAT INCORPORATE NATURAL CHANNEL DESIGN CONCEPTS THAT ARE NOT MAN-MADE CHANNELS AND SHALL BE EXEMPT FROM ANY FLOW RATE CAPACITY AND VELOCITY REQUIREMENTS FORNATURAL OR MAN-MADE CHANNELS:

   a. CONCENTRATED STORMWATER RUNOFF LEAVING A DEVELOPMENT SITE SHALL BE DISCHARGED DIRECTLY INTO AN ADEQUATE NATURAL OR MAN-MADE RECEIVING CHANNEL, PIPE OR STORM SEWER SYSTEM. FOR THOSE SITES WHERE RUNOFF IS DISCHARGED INTO A PIPE OR PIPE SYSTEM, DOWNSTREAM STABILITY ANALYSES AT THE OUTFALL OF THE PIPE OR PIPE SYSTEM SHALL BE PERFORMED.

   b. ADEQUACY OF ALL CHANNELS AND PIPES SHALL BE VERIFIED IN THE FOLLOWING MANNER:

      (1) THE APPLICANT SHALL DEMONSTRATE THAT THE TOTAL DRAINAGE AREA TO THE POINT OF ANALYSIS WITHIN THE CHANNEL IS ONE HUNDRED TIMES GREATER THAN THE CONTRIBUTING DRAINAGE AREA OF THE PROJECT IN QUESTION; OR

      (2) (a) NATURAL CHANNELS SHALL BE ANALYZED BY THE USE OF A TWO-YEAR STORM TO VERIFY THAT STORMWATER WILL NOT OVERTOP CHANNEL BANKS NOR CAUSE EROSION OF CHANNEL BED OR BANKS; AND

      (b) ALL PREVIOUSLY CONSTRUCTED MAN-MADE CHANNELS SHALL BE ANALYZED BY THE USE OF A TEN-YEAR STORM TO VERIFY THAT STORMWATER WILL NOT OVERTOP ITS BANKS AND BY THE USE OF A TWO-YEAR STORM TO DEMONSTRATE THAT STORMWATER WILL NOT CAUSE EROSION OF CHANNEL BED OR BANKS; AND

      (c) PIPES AND STORM SEWER SYSTEMS SHALL BE ANALYZED BY THE USE OF A TEN-YEAR STORM TO VERIFY THAT STORMWATER WILL BE CONTAINED WITHIN THE PIPE OR SYSTEM.

   c. IF EXISTING NATURAL RECEIVING CHANNELS OR PREVIOUSLY CONSTRUCTED MAN-MADE CHANNELS OR PIPES ARE NOT ADEQUATE, THE APPLICANT SHALL:

      (1) IMPROVE THE CHANNEL TO A CONDITION WHERE A TEN-YEAR STORM WILL NOT OVERTOP THE BANKS AND A TWO-YEAR STORM WILL NOT CAUSE EROSION TO THE CHANNEL, BED OR BANKS; OR

      (2) IMPROVE THE PIPE OR PIPE SYSTEM TO A CONDITION WHERE THE TEN-YEAR STORM IS CONTAINED WITHIN THE APPURTENANCES; OR

      (3) DEVELOP A SITE DESIGN THAT WILL NOT CAUSE THE PRE-DEVELOPMENT PEAK RUNOFF RATE FROM A TWO-YEAR STORM TO INCREASE WHEN RUNOFF OUTFALLS INTO A NATURAL CHANNEL OR WILL NOT CAUSE THE PRE-DEVELOPMENT PEAK RUNOFF RATE FROM A TEN-YEAR STORM TO INCREASE WHEN RUNOFF OUTFALLS INTO A MAN-MADE CHANNEL; OR

      (4) PROVIDE A COMBINATION OF CHANNEL IMPROVEMENT, STORMWATER DETENTION OR OTHER MEASURES WHICH IS SATISFACTORY TO THE PLAN-APPROVING AUTHORITY TO PREVENT DOWNSTREAM EROSION.

   d. THE APPLICANT SHALL PROVIDE EVIDENCE OF PERMISSION TO MAKE THE IMPROVEMENTS.

   e. ALL HYDROLOGIC ANALYSES SHALL BE BASED ON THE EXISTING WATERSHED CHARACTERISTICS AND THE ULTIMATE DEVELOPMENT CONDITION OF THE SUBJECT PARCEL.

   f. IF THE APPLICANT CHOOSES AN OPTION THAT INCLUDES STORMWATER DETENTION HE SHALL OBTAIN APPROVAL FROM THE LOCALITY OF A PLAN FOR MAINTENANCE OF THE DETENTION FACILITIES. THE PLAN SHALL SET FORTH THE MAINTENANCE REQUIREMENTS OF THE FACILITY AND THE PERSON RESPONSIBLE FOR PERFORMING THE MAINTENANCE.

   g. OUTFALL FROM A DETENTION FACILITY SHALL BE DISCHARGED TO A RECEIVING CHANNEL, AND ENERGY DISSIPATERS SHALL BE PLACED AT THE OUTFALL OF ALL DETENTION FACILITIES AS NECESSARY TO PROVIDE A STABILIZED TRANSITION FROM THE FACILITY TO THE RECEIVING CHANNEL.

   h. ALL ON-SITE CHANNELS MUST BE VERIFIED TO BE ADEQUATE.

   i. INCREASED VOLUMES OF SHEET FLOWS THAT MAY CAUSE EROSION OR SEDIMENTATION ON ADJACENT PROPERTY SHALL BE DIVERTED TO A STABLE OUTLET, ADEQUATE CHANNEL, PIPE OR PIPE SYSTEM, OR TO A DETENTION FACILITY.

   j. IN APPLYING THE STORMWATER RUNOFF CRITERIA, INDIVIDUAL LOTS OR PARCELS IN A RESIDENTIAL, COMMERCIAL OR INDUSTRIAL DEVELOPMENT SHALL NOT BE CONSIDERED TO BE SEPARATE DEVELOPMENT PROJECTS. INSTEAD, THE DEVELOPMENT, AS A WHOLE, SHALL BE CONSIDERED TO BE A SINGLE DEVELOPMENT PROJECT. HYDROLOGIC PARAMETERS THAT REFLECT THE ULTIMATE DEVELOPMENT CONDITION SHALL BE USED IN ALL ENGINEERING CALCULATIONS.

   k. ALL MEASURES USED TO PROTECT PROPERTIES AND WATERWAYS SHALL BE EMPLOYED IN A MANNER WHICH MINIMIZES IMPACTS ON THE PHYSICAL, CHEMICAL AND BIOLOGICAL INTEGRITY OF RIVERS, STREAMS AND OTHER WATERS OF THE STATE.

   l. ANY PLAN APPROVED PRIOR TO JULY 1, 2014, THAT PROVIDES FOR STORMWATER MANAGEMENT THAT ADDRESSES ANY FLOW RATE CAPACITY AND VELOCITY REQUIREMENTS FOR NATURAL OR MAN-MADE CHANNELS SHALL SATISFY THE FLOW RATE CAPACITY AND VELOCITY REQUIREMENTS FOR NATURAL OR MAN-MADE CHANNELS IF THE PRACTICES ARE DESIGNED TO (i) DETAIN THE WATER QUALITY VOLUME AND TO RELEASE IT OVER 48 HOURS; (ii) DETAIN AND RELEASE OVER A 24-HOUR PERIOD THE EXPECTED RAINFALL RESULTING FROM THE ONE YEAR, 24-HOUR STORM; AND (iii) REDUCE THE PEAK FLOW RATE RESULTING FROM THE 1.5, 2, AND 10-YEAR, 24-HOUR STORMS TO A LEVEL THAT IS LESS THAN OR EQUAL TO THE PEAK FLOW RATE FROM THE SITE ASSUMING IT WAS IN A GOOD FORESTED CONDITION, ACHIEVED THROUGH MULTIPLICATION OF THE FORESTED PEAK FLOW RATE BY A REDUCTION FACTOR THAT IS EQUAL TO THE RUNOFF VOLUME FROM THE SITE WHEN IT WAS IN A GOOD FORESTED CONDITION DIVIDED BY THE RUNOFF VOLUME FROM THE SITE IN ITS PROPOSED CONDITION, AND SHALL BE EXEMPT FROM ANY FLOW RATE CAPACITY AND VELOCITY REQUIREMENTS FOR NATURAL OR MAN-MADE CHANNELS AS DEFINED IN ANY REGULATIONS PROMULGATED PURSUANT TO § 62.1-44.15:54 OR 62.1-44.15:65 OF THE ACT.

   m. FOR PLANS APPROVED ON AND AFTER JULY 1, 2014, THE FLOW RATE CAPACITY AND VELOCITY REQUIREMENTS OF § 62.1-44.15:52 A OF THE ACT AND THIS SUBSEQUENT SECTION SHALL BE SATISFIED BY THE COMPLIANCE OF THE WATER QUANTITY REQUIREMENTS IN THE STORMWATER MANAGEMENT ACT (§ 62.1-44.15:24 ET SEQ. OF THE CODE OF VIRGINIA) AND ATTENDANT REGULATIONS, UNLESS SUCH LAND-DISTURBING ACTIVITIES ARE IN ACCORDANCE WITH 9VAC25-870-48 OF THE VIRGINIA STORMWATER MANAGEMENT PROGRAM (VSMP) REGULATIONS.

   n. COMPLIANCE WITH THE WATER QUANTITY MINIMUM STANDARDS SET OUT IN 9VAC25-870-66 OF THE VIRGINIA STORMWATER MANAGEMENT PROGRAM (VSMP) REGULATIONS SHALL BE DEEMED TO SATISFY THE REQUIREMENTS OF SUBDIVISION 19 OF THIS SUBSECTION.

QUINN EVANS ARCHITECTS

2121 WARD PLACE, NW
FOURTH FLOOR
WASHINGTON, DC 20036

v 202 298 6700
f 202 298 6666

WWW.QUINNEVANS.COM

vhb

115 SOUTH 15TH STREET
SUITE 200
RICHMOND, VIRGINIA 23219

804.343.7100 | FAX 804.343.1713

FERRY FARM PHASE 1 IMPROVEMENTS

268 Kings Hwy, Fredericksburg, VA 22405

QEA # 31402900

Erosion Control Notes

COMMONWEALTH OF VIRGINIA
JOHN P. CARTY
Lic. No. 039452
12/19/14
PROFESSIONAL ENGINEER

SITE PERMIT SUBMISSION
12/19/14

REVISIONS

NO.	DESCRIPTION	DATE

C-206

12/9/2014 5:09:41 PM \\VHB\PROJ\RICHMOND\37512.07 QEA FERRY FARM PHASE I\CADD\PLANSET\37512.07-2T

TABLE 3.32-D
SITE SPECIFIC SEEDING MIXTURES FOR PIEDMONT AREA

	Total Lbs. Per Acre
Minimum Care Lawn	
–Commercial or Residential	175–200 lbs.
–Kentucky 31 or Turf–Type Tall Fescue	95–100%
–Improved Perennial Ryegrass	0–5%
–Kentucky Bluegrass	0–5%
High–Maintenance Lawn	200–500 lbs.
–Kentucky 31 or Turf–Type Tall Fescue	100%
General Slope (3:1 or Less)	
–Kentucky 31 Fescue	128 lbs.
–Red Top Grass	2 lbs.
–Seasonal Nurse Crop*	20 lbs.
	150 lbs.
Low Maintenance Slope (Steeper than 3:1)	
–Kentucky 31 Fescue	108 lbs.
–Red Top Grass	2 lbs.
–Seasonal Nurse Crop*	20 lbs.
–Crownvetch**	20 lbs.
	150 lbs.

* Use seasonal nurse crop in accordance with seeding dates as stated below:

February 16th through April ..... Annual Rye
May 1st through August 15th ..... Foxtail Millet
August 16th through October ..... Annual Rye
November through February 15th ..... Winter Rye

** Substitute Sericea lespedeza for Cownvetch east of Farmville, VA. (May through September use hulled Sericea, all other periods, use unhulled Sericea). If Flatpea is used in lieu of Crownvetch, increase rate to 30lbs./acre. All legume seed must be properly inoculated. Weeping Lovegrass may be added to any slope or low–maintenance mix during warmer seeding periods; add 10–20 lbs./acre in mixes.

Note: Contractor shall coordinate all permanent seeding with owner's representative.

Permanent Seeding Specifications
6/08
N.T.S. Source: Virginia Erosion And Sediment Control Handbook PL 3.32–D

TABLE 3.31-B
ACCEPTABLE TEMPORARY SEEDING PLANT MATERIALS
"QUICK REFERENCE FOR ALL REGIONS"

Planting Dates	Species	Rate (lbs./acre)
Sept. 1 – Feb. 15	50/50 Mix of Annual Ryegrass (Lolium muti–florum) & Cereal (Winter) Rye (Secale cereale)	50 – 100
Feb. 16 – Apr. 30	Annual Ryegrass (Lolium muti–florum)	60 – 100
May 1 – Aug. 31	German Millet (Setaria italica)	50

Note: Contractor shall coordinate all temporary seeding with owner's representative.

Temporary Seeding Specifications
6/08
N.T.S. Source: Virginia Erosion And Sediment Control Handbook PL 3.31–B

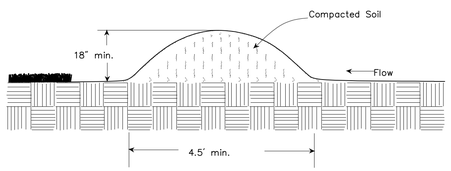

Temporary Diversion Dike
6/08
N.T.S. Source: Virginia Erosion And Sediment Control Handbook Plate 3.09–1

Silt Fence Culvert Inlet Protection

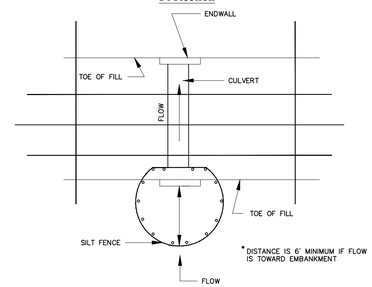

***Optional Stone Combination**

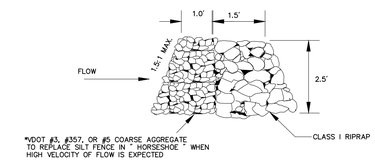

Silt Fence Culvert Inlet Protection
6/08
N.T.S. Source: Virginia Erosion And Sediment Control Handbook Plate 3.08–1

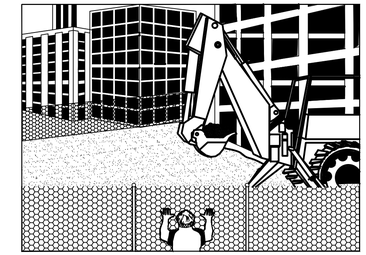

Perspective View

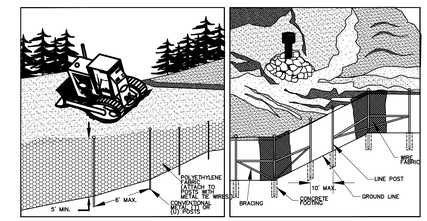

Perspective View Plastic Fence | **Perspective View Metal Fence**

Safety Fence
6/08
N.T.S. Source: Virginia Erosion And Sediment Control Handbook Plate 3.01–1

2 Acres Or Less Of Drainage Area:

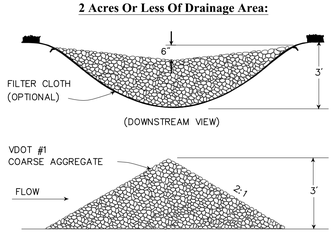

2-10 Acres Of Drainage Area:

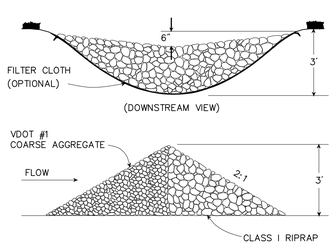

Rock Check Dam
6/08
N.T.S. Source: Virginia Erosion And Sediment Control Handbook Plate 3.20–1

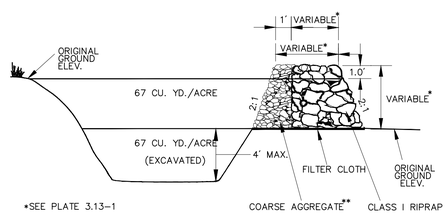

Cross Section Of Outlet

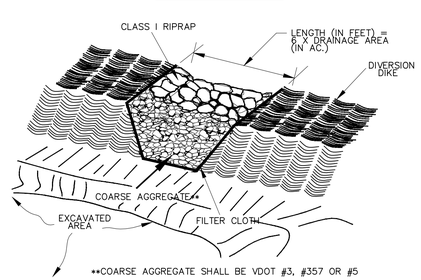

Outlet (Perspective View)

Temporary Sediment Trap
6/08
N.T.S. Source: Virginia Erosion And Sediment Control Handbook Plate 3.13–2

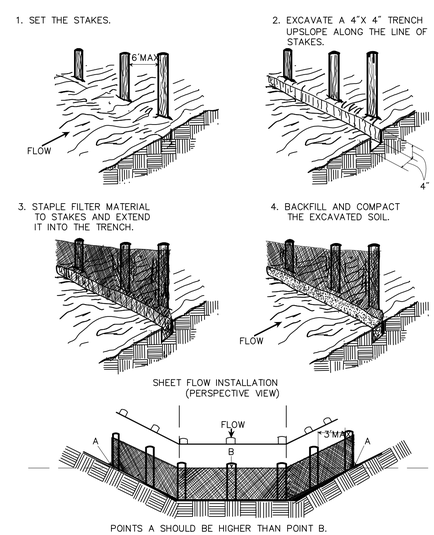

Construction Of A Silt Fence (Without Wire Support)
6/08
N.T.S. Source: Virginia Erosion And Sediment Control Handbook Plate 3.05–2

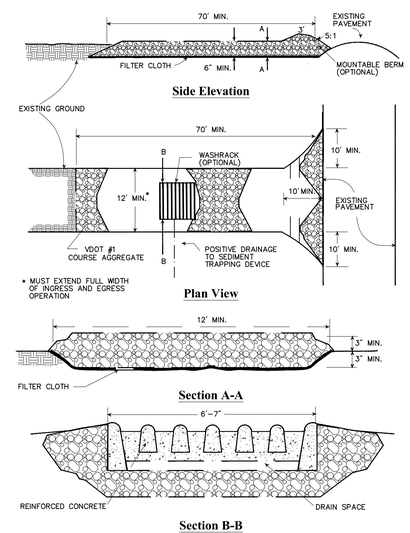

Stone Construction Entrance
6/08
N.T.S. Source: Virginia Erosion And Sediment Control Handbook Plate 3.02–1

QUINN EVANS ARCHITECTS
2121 WARD PLACE, NW
FOURTH FLOOR
WASHINGTON, DC 20036
v 202 298 6700
f 202 298 6666
WWW.QUINNEVANS.COM

vhb
115 SOUTH 15TH STREET
SUITE 200
RICHMOND, VIRGINIA 23219
804.343.7100 | FAX 804.343.1713

FERRY FARM PHASE 1 IMPROVEMENTS

268 Kings Hwy,
Fredericksburg, VA
22405
QEA # 31402900

Erosion Control Details

COMMONWEALTH OF VIRGINIA
JOHN P. CARTY
Lic. No. 039452
12/19/14
PROFESSIONAL ENGINEER

SITE PERMIT SUBMISSION
12/19/14

REVISIONS

NO.	DESCRIPTION	DATE

C-207

12/19/2014 5:09:41 PM \\VHB\PROJ\RICHMOND\37912.07 QEA FERRY FARM PHASE I\CAD\LD\PLANSET\37912.07-DT

VHB Computations

Project: Ferry Farm | Project # 37912.07
Location: | Sheet | of
Calculated by: | Date:
Checked by: | Date:
Title OUTLET PROTECTION

STM-3 : 12" RCP, Q_{10} = 3.68 cfs
downstream channel: 3' bottom, 3:1 side slopes
slope = 4.17% n = 0.15

tailwater depth = 0.27' → minimum tailwater depth

Plate 3.18-3 :
apron length: L_a = 8
median stone: d_{50} = 6"
d_o = 12"
w = 9'

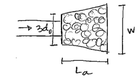

STM 23: 12" RCP, Q_{10} = 0.75 cfs
downstream channel: 3' bottom, 3:1 side slopes
slope = 1.27% n = 0.15

tailwater depth = 0.15' → minimum tailwater depth

Plate 3.18-3: L_a = 6' (min.) d_{50} = 6" (min.)
d_o = 12" w = 7'

STM 25: 12" RCP, Q_{10} = 0.84 cfs
downstream channel: 3' bottom, 3:1 side slopes
slope = 1.27% n = 0.15

tailwater depth = 0.16' → minimum tailwater depth

Plate 3.18-3 : L_a = 6' (min) d_{50} = 6" (min)
d_o = 12"
w = 7'

Vanasse Hangen Brustlin, Inc.

Outlet Protection Calculations

N.T.S. Source: VHB

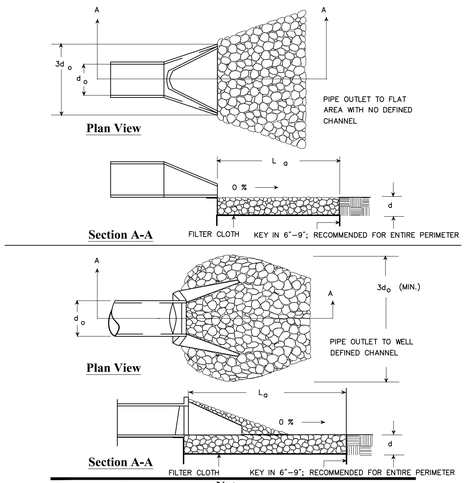

Notes:

1. APRON LINING MAY BE RIPRAP, GROUTED RIPRAP, GABION BASKET, OR
2. La IS THE LENGTH OF THE RIPRAP APRON AS CALCULATED USING PLATES 3.18-3 AND 3.18-4.
3. d = 1.5 TIMES THE MAXIMUM STONE DIAMETER, BUT NOT LESS THAN 6 INCHES.

Pipe Outlet Conditions

6/08

N.T.S. Source: Virginia Erosion And Sediment Control Handbook Plate 3.18-1

VHB Vanasse Hangen Brustlin, Inc.
Consulting Engineers and Planners
115 S. 15th Street
Suite 200
Richmond, VA 23219
(804) 343-7100

Sediment Trap Volume Calculations

Project : Ferry Farm - Phase 1
Calculated by: R. Clayton
Date: 12/18/2014
Location: North East - Main Entrance and Ravine

Sediment Trap Information:

Drainage Area: 1.70 acres
V_{sp} Req'd: 228 cy
V_{wet} Req'd: 114 cy
V_{dry} Req'd: 114 cy
Spillway Width: 10 ft

Final Design Information:

Top of Berm: 64.0 feet
Top of Spillway: 62.9 feet
Bot of Spillway: 61.7 feet
Bot of Trap: 60.0 feet
Wet Stor. Vol.: 115 cy
Dry Stor. Vol.: 115 cy
Width of Spillway: 10 feet
Width of Berm: 3.0 feet
Side Slopes: 3:1 H:V

Contour Elevation	Contour Area (ft^2)	$A1+A2+(A1*A2)^{1/2}$ (ft^2)	Volume (cy)	Accumulated Volume (cy)
60	1310	0	0	0
61	1866	4739	58	58
62	2478	6494	80	139
63	3147	8418	104	242
64	3872	10510	130	372
65	0	3872	48	420

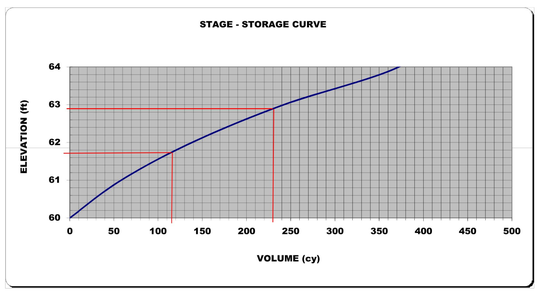

Sediment Trap Calculations

N.T.S. Source: VHB

VHB Vanasse Hangen Brustlin, Inc.
Consulting Engineers and Planners
115 S. 15th Street
Suite 200
Richmond, VA 23219
(804) 343-7100

Sediment Trap Volume Calculations

Project : Ferry Farm - Phase 1
Calculated by: R. Clayton
Date: 12/18/2014
Location: South West - Maintenance and Operations Area

Sediment Trap Information:

Drainage Area: 2.64 acres
V_{sp} Req'd: 354 cy
V_{wet} Req'd: 177 cy
V_{dry} Req'd: 177 cy
Spillway Width: 16 ft

Final Design Information:

Top of Berm: 55.0 feet
Top of Spillway: 53.8 feet
Bot of Spillway: 52.6 feet
Bot of Trap: 50.0 feet
Wet Stor. Vol.: 195 cy
Dry Stor. Vol.: 195 cy
Width of Spillway: 16 feet
Width of Berm: 5.0 feet
Side Slopes: 3:1 H:V

Contour Elevation	Contour Area (ft^2)	$A1+A2+(A1*A2)^{1/2}$ (ft^2)	Volume (cy)	Accumulated Volume (cy)
51	2725	0	0	0
52	3515	9335	115	115
53	4360	11790	145	261
54	5263	14413	178	438
55	6222	17207	212	651

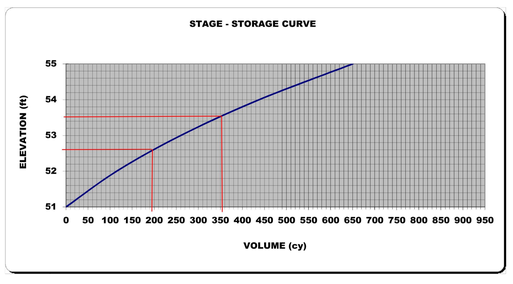

QUINN EVANS ARCHITECTS
2121 WARD PLACE, NW
FOURTH FLOOR
WASHINGTON, DC 20036
v 202 298 6700
f 202 298 6666
WWW.QUINNEVANS.COM

vhb
115 SOUTH 15TH STREET
SUITE 200
RICHMOND, VIRGINIA 23219
804.343.7100 | FAX 804.343.1713

FERRY FARM PHASE 1 IMPROVEMENTS

268 Kings Hwy,
Fredericksburg, VA
22405
QEA # 31402900

Erosion Control Details

COMMONWEALTH OF VIRGINIA
JOHN P. CARTY
Lic. No. 039452
12/19/14
PROFESSIONAL ENGINEER

SITE PERMIT SUBMISSION
12/19/14

REVISIONS

NO.	DESCRIPTION	DATE

C-208

12/9/2014 5:09:41 PM \\RICHVAVPROJECTS\37912-07 QEA FERRY FARM PHASE IC\ACAD\DPL\ANSE1\37912.07-C2T

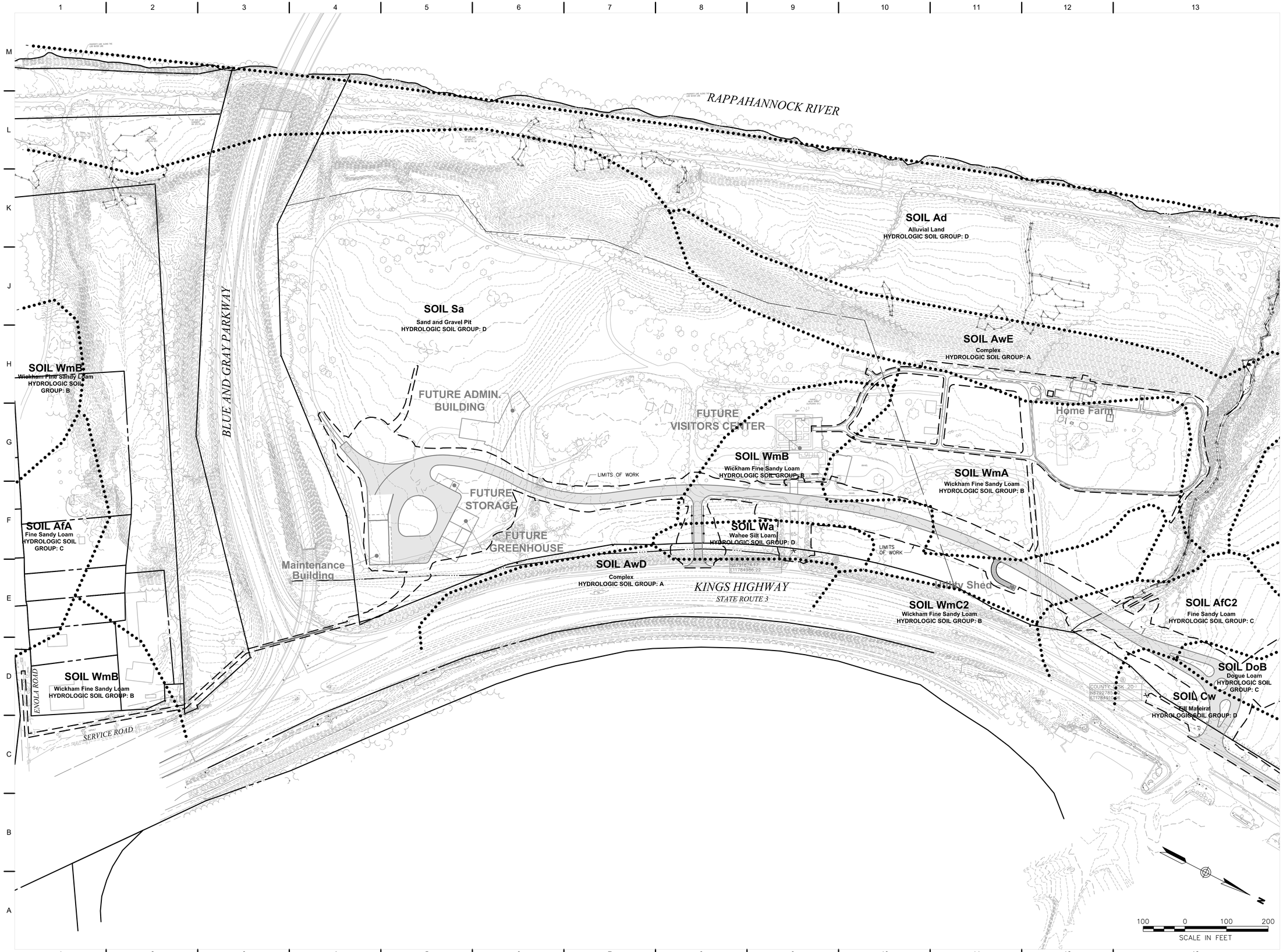

QUINN EVANS ARCHITECTS

2121 WARD PLACE, NW
FOURTH FLOOR
WASHINGTON, DC 20036

v 202 298 6700
f 202 298 6666

WWW.QUINNEVANS.COM

vhb

115 SOUTH 15TH STREET
SUITE 200
RICHMOND, VIRGINIA 23219

804.343.7100 | FAX 804.343.1713

FERRY FARM PHASE 1 IMPROVEMENTS

268 Kings Hwy, Fredericksburg, VA 22405

QEA # 31402900

Soils Map

COMMONWEALTH OF VIRGINIA
JOHN P. CARTY
Lic. No. 039452
12/19/14
PROFESSIONAL ENGINEER

SITE PERMIT SUBMISSION
12/19/14

REVISIONS

NO.	DESCRIPTION	DATE

C-209

12/19/2014 5:09:41 PM I:\VHB\PROJ\RICHMOND\37912.07 QEA FERRY FARM PHASE I\CAD\LDP\LANSET\37912.07C-SOILS

Parking Summary Chart

Description	Size		Spaces	
	Required	Provided	Required	Provided
STANDARD SPACES	8.5 x 18	9 x 18	3	3
STANDARD ACCESSIBLE SPACES *	8 x 18	9 x 18	0	0
VAN ACCESSIBLE SPACES	8 x 18	8 x 18	1	1
TOTAL SPACES			4	4
LOADING BAYS**	12 x 25	12 x 25	1	1

* ADA/STATE/LOCAL REQUIREMENTS
** LOADING BAYS: ONE BAY PER 10,000 SF

Parking Requirements:

STORAGE 3,680 SF x 1 SPACES / 1,000 = 4 SPACES
TOTAL PARKING REQUIRED = 4 SPACES

Zoning Summary Chart

Zoning District(S): Heritage Interpretation
Overlay District(S): None

Zoning Regulation Requirements	Required	Provided
MAXIMUM BUILDING HEIGHT	40 Feet	23 Feet

Pavement Legend

- HEAVY DUTY PAVEMENT
- CONCRETE SIDEWALK
- GRAVEL
- REINFORCED TURF

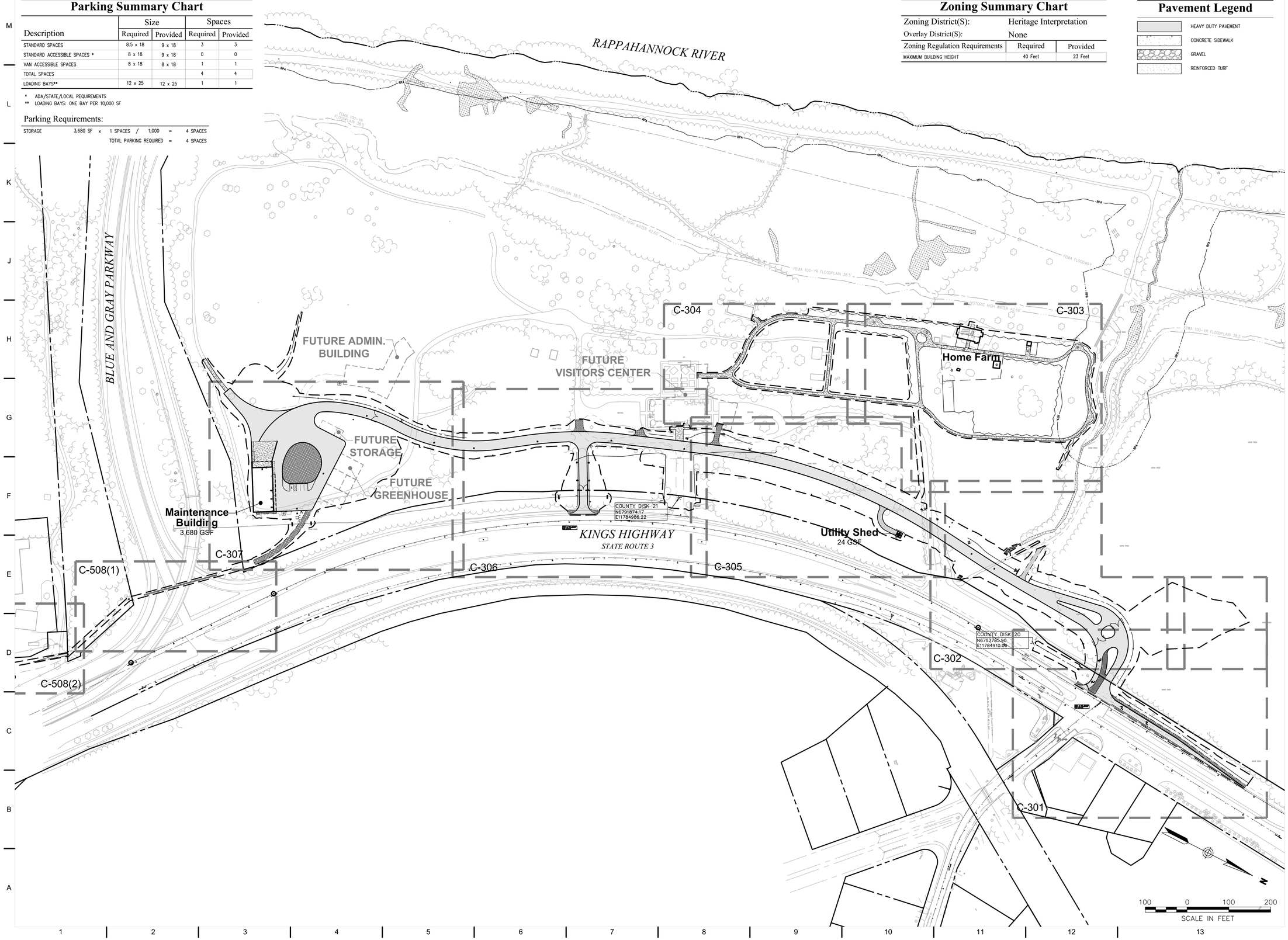

QUINN EVANS ARCHITECTS

2121 WARD PLACE, NW
FOURTH FLOOR
WASHINGTON, DC 20036

v 202 298 6700
f 202 298 6666

WWW.QUINNEVANS.COM

vhb

115 SOUTH 15TH STREET
SUITE 200
RICHMOND, VIRGINIA 23219

804.343.7100 | FAX 804.343.1713

FERRY FARM PHASE 1 IMPROVEMENTS

268 Kings Hwy, Fredericksburg, VA 22405

QEA # 31402900

Overall Layout and Materials Plan

COMMONWEALTH OF VIRGINIA
JOHN P. CARTY
Lic. No. 039452
12/19/14
PROFESSIONAL ENGINEER

SITE PERMIT SUBMISSION
12/19/14

REVISIONS

NO.	DESCRIPTION	DATE

C-300

12/9/2014 5:09:41 PM \\VHBPROJ\RICHMOND\37912.07 QEA FERRY FARM PHASE 1\CAD\LD\PLANSET\37912.07LM

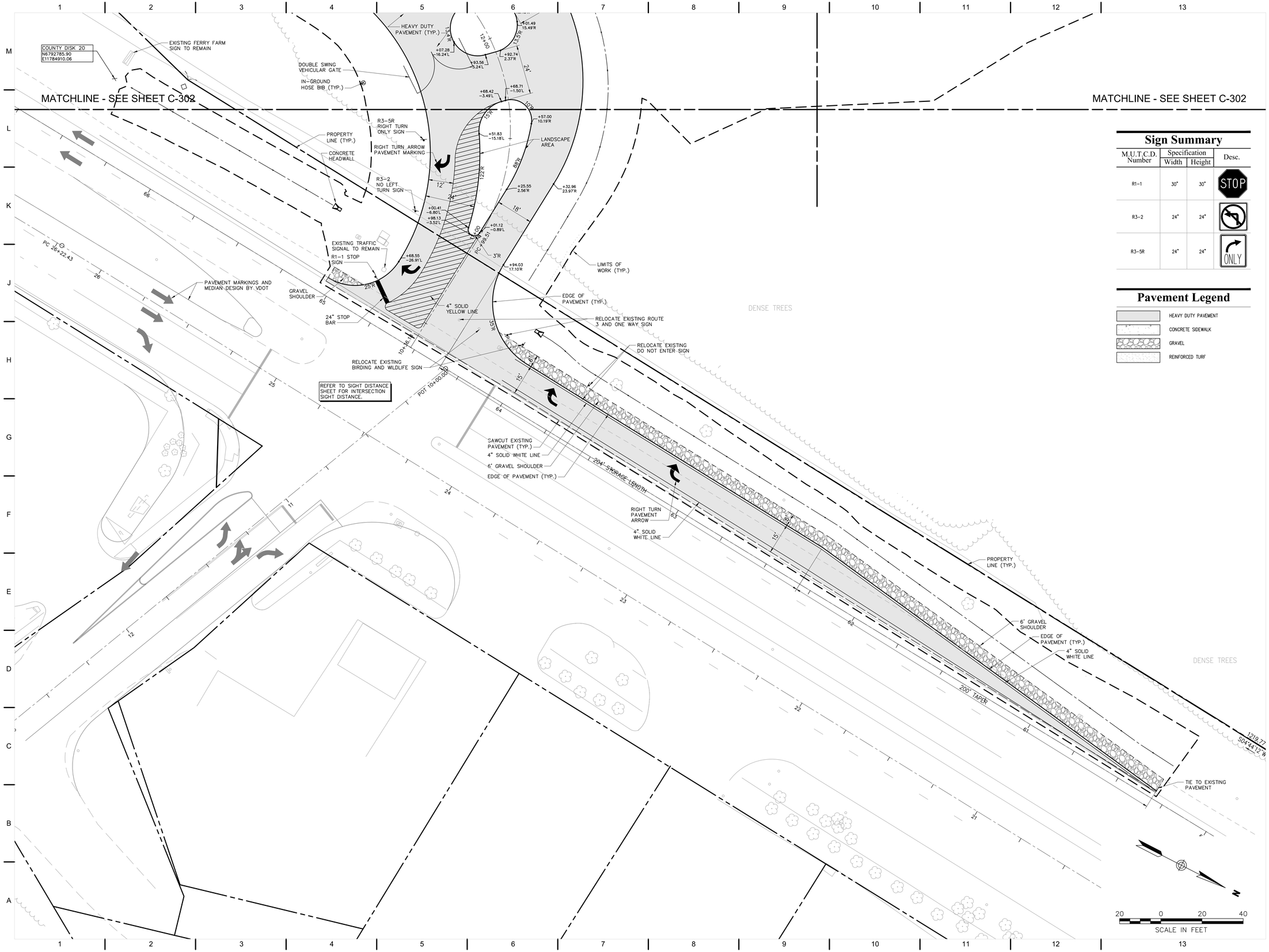

Sign Summary

M.U.T.C.D. Number	Specification Width	Specification Height	Desc.
R1-1	30"	30"	STOP
R3-2	24"	24"	
R3-5R	24"	24"	ONLY

Pavement Legend

- HEAVY DUTY PAVEMENT
- CONCRETE SIDEWALK
- GRAVEL
- REINFORCED TURF

QUINN EVANS ARCHITECTS

2121 WARD PLACE, NW
FOURTH FLOOR
WASHINGTON, DC 20036

v 202 298 6700
f 202 298 6666

WWW.QUINNEVANS.COM

vhb

115 SOUTH 15TH STREET
SUITE 200
RICHMOND, VIRGINIA 23219

804.343.7100 | FAX 804.343.1713

FERRY FARM PHASE 1 IMPROVEMENTS

268 Kings Hwy, Fredericksburg, VA 22405

QEA # 31402900

Layout and Materials Plan

COMMONWEALTH OF VIRGINIA
JOHN P. CARTY
Lic. No. 039452
12/19/14
PROFESSIONAL ENGINEER

SITE PERMIT SUBMISSION
12/19/14

REVISIONS

NO.	DESCRIPTION	DATE

C-301

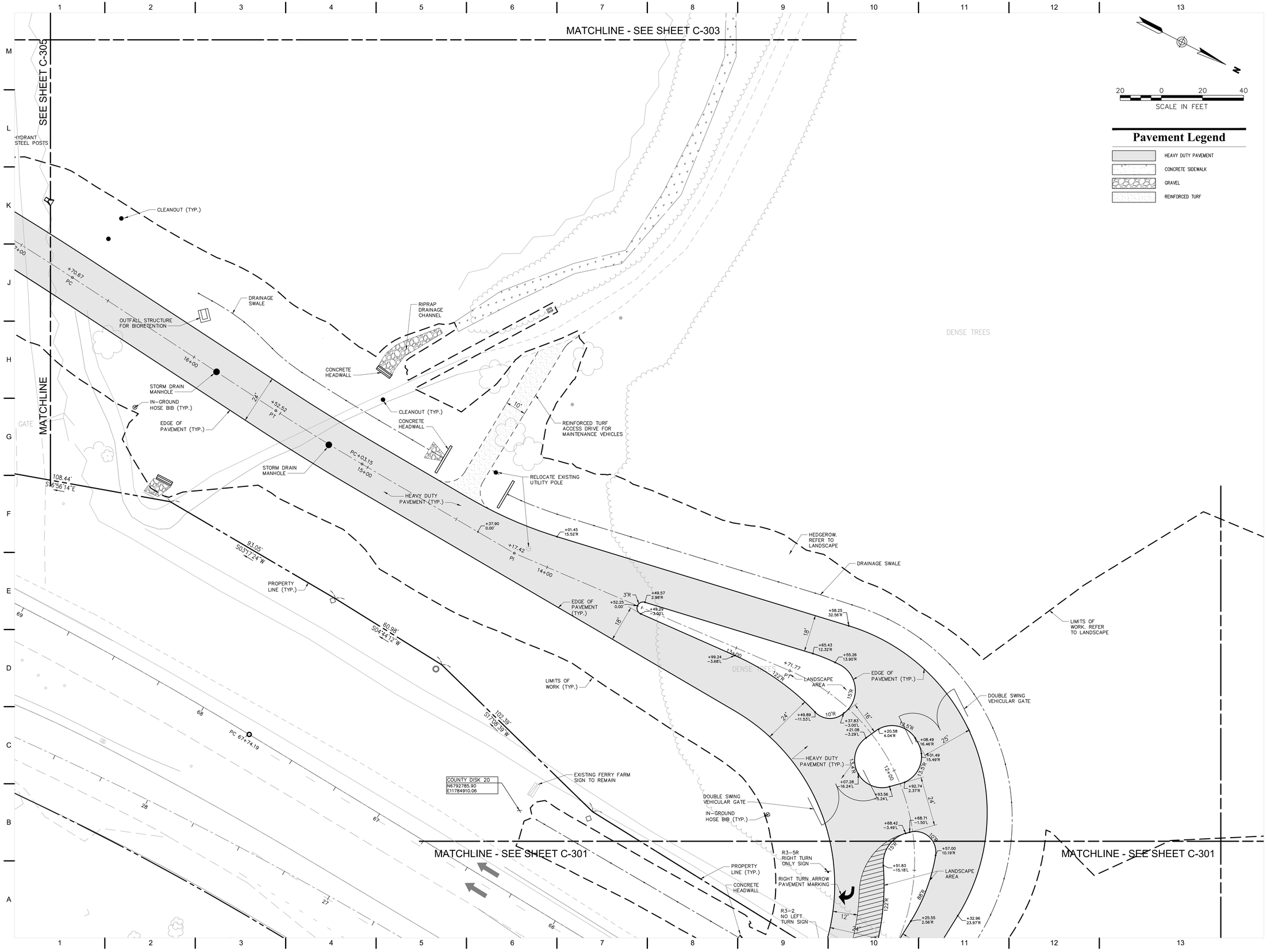

QUINN EVANS ARCHITECTS

2121 WARD PLACE, NW
FOURTH FLOOR
WASHINGTON, DC 20036

v 202 298 6700
f 202 298 6666

WWW.QUINNEVANS.COM

vhb

115 SOUTH 15TH STREET
SUITE 200
RICHMOND, VIRGINIA 23219

804.343.7100 | FAX 804.343.1713

FERRY FARM PHASE 1 IMPROVEMENTS

268 Kings Hwy, Fredericksburg, VA 22405

QEA # 31402900

Layout and Materials Plan

COMMONWEALTH OF VIRGINIA
JOHN P. CARTY
Lic. No. 039452
12/19/14
PROFESSIONAL ENGINEER

SITE PERMIT SUBMISSION
12/19/14

REVISIONS

NO.	DESCRIPTION	DATE

C-302

12/9/2014 5:09:41 PM
\\RICHVA\PROJECTS\37912.07 QEA FERRY FARM PHASE RCA\DLR\FLANSE\TU37912.07-LM

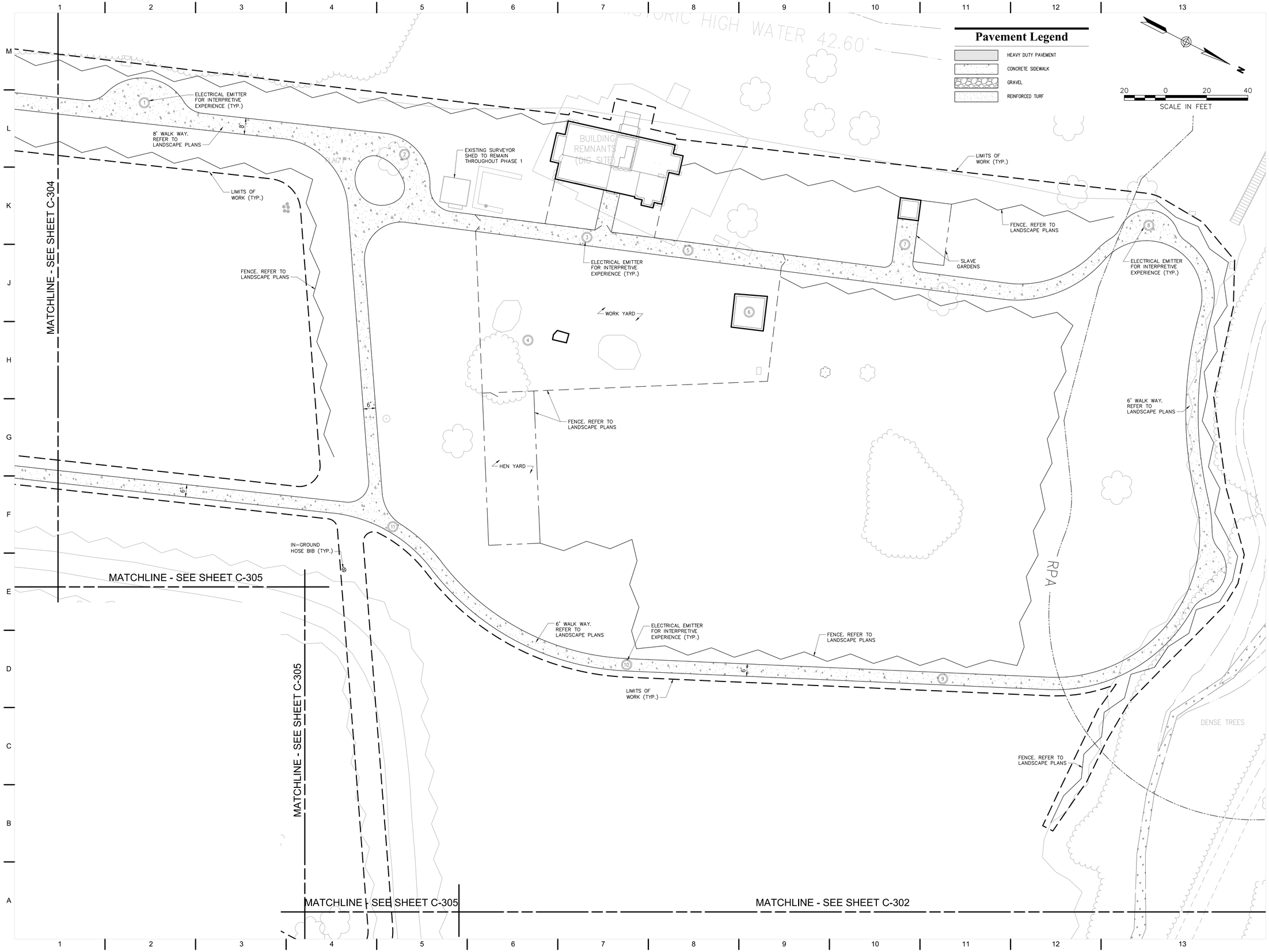

QUINN EVANS ARCHITECTS

2121 WARD PLACE, NW
FOURTH FLOOR
WASHINGTON, DC 20036

v 202 298 6700
f 202 298 6666

WWW.QUINNEVANS.COM

vhb

115 SOUTH 15TH STREET
SUITE 200
RICHMOND, VIRGINIA 23219

804.343.7100 | FAX 804.343.1713

FERRY FARM PHASE 1 IMPROVEMENTS

268 Kings Hwy, Fredericksburg, VA 22405

QEA # 31402900

Layout and Materials Plan

COMMONWEALTH OF VIRGINIA
JOHN P. CARTY
Lic. No. 039452
12/19/14
PROFESSIONAL ENGINEER

SITE PERMIT SUBMISSION
12/19/14

REVISIONS

NO.	DESCRIPTION	DATE

C-303

12/9/2014 5:09:41 PM \\VHBPROJ\RICHMOND\37912.07 QEA FERRY FARM PHASE I\CAD\LDP\LANSE\T\37912.07-LM

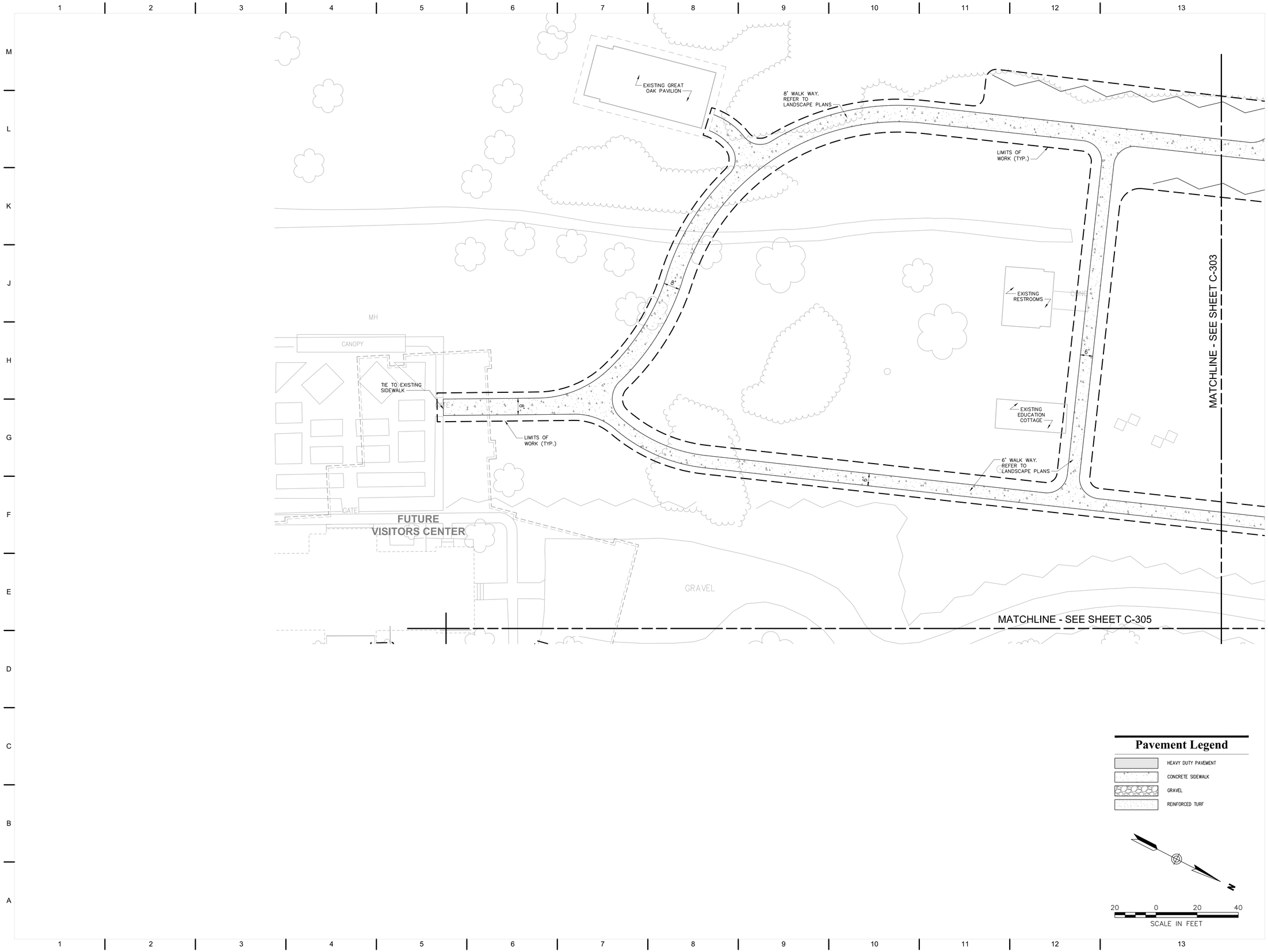

QUINN EVANS ARCHITECTS

2121 WARD PLACE, NW
FOURTH FLOOR
WASHINGTON, DC 20036

v 202 298 6700
f 202 298 6666

WWW.QUINNEVANS.COM

vhb

115 SOUTH 15TH STREET
SUITE 200
RICHMOND, VIRGINIA 23219

804.343.7100 | FAX 804.343.1713

FERRY FARM PHASE 1 IMPROVEMENTS

268 Kings Hwy, Fredericksburg, VA 22405

QEA # 31402900

Layout and Materials Plan

COMMONWEALTH OF VIRGINIA
JOHN P. CARTY
Lic. No. 039452
12/19/14
PROFESSIONAL ENGINEER

SITE PERMIT SUBMISSION
12/19/14

REVISIONS

NO.	DESCRIPTION	DATE

C-304

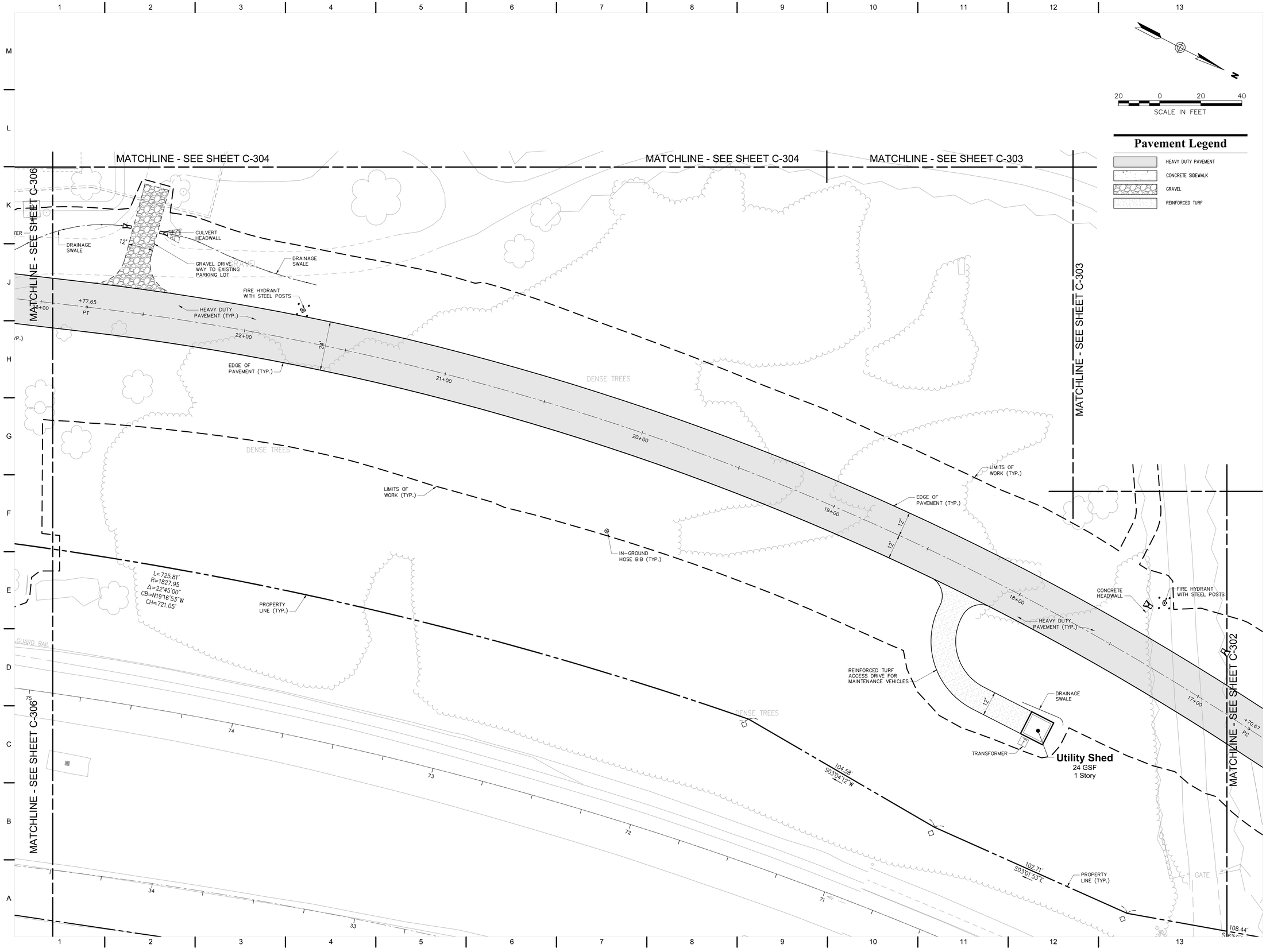

QUINN EVANS ARCHITECTS

2121 WARD PLACE, NW
FOURTH FLOOR
WASHINGTON, DC 20036

v 202 298 6700
f 202 298 6666

WWW.QUINNEVANS.COM

vhb

115 SOUTH 15TH STREET
SUITE 200
RICHMOND, VIRGINIA 23219

804.343.7100 | FAX 804.343.1713

FERRY FARM PHASE 1 IMPROVEMENTS

268 Kings Hwy, Fredericksburg, VA 22405

QEA # 31402900

Layout and Materials Plan

COMMONWEALTH OF VIRGINIA
JOHN P. CARTY
Lic. No. 039452
12/19/14
PROFESSIONAL ENGINEER

SITE PERMIT SUBMISSION
12/19/14

REVISIONS

NO.	DESCRIPTION	DATE

C-305

\\RICHVA\PROJECTS\37912.07 QEA FERRY FARM PHASE I\CAD\LDP\LANDSET\37912-07-LM
12/9/2014 5:09:41 PM

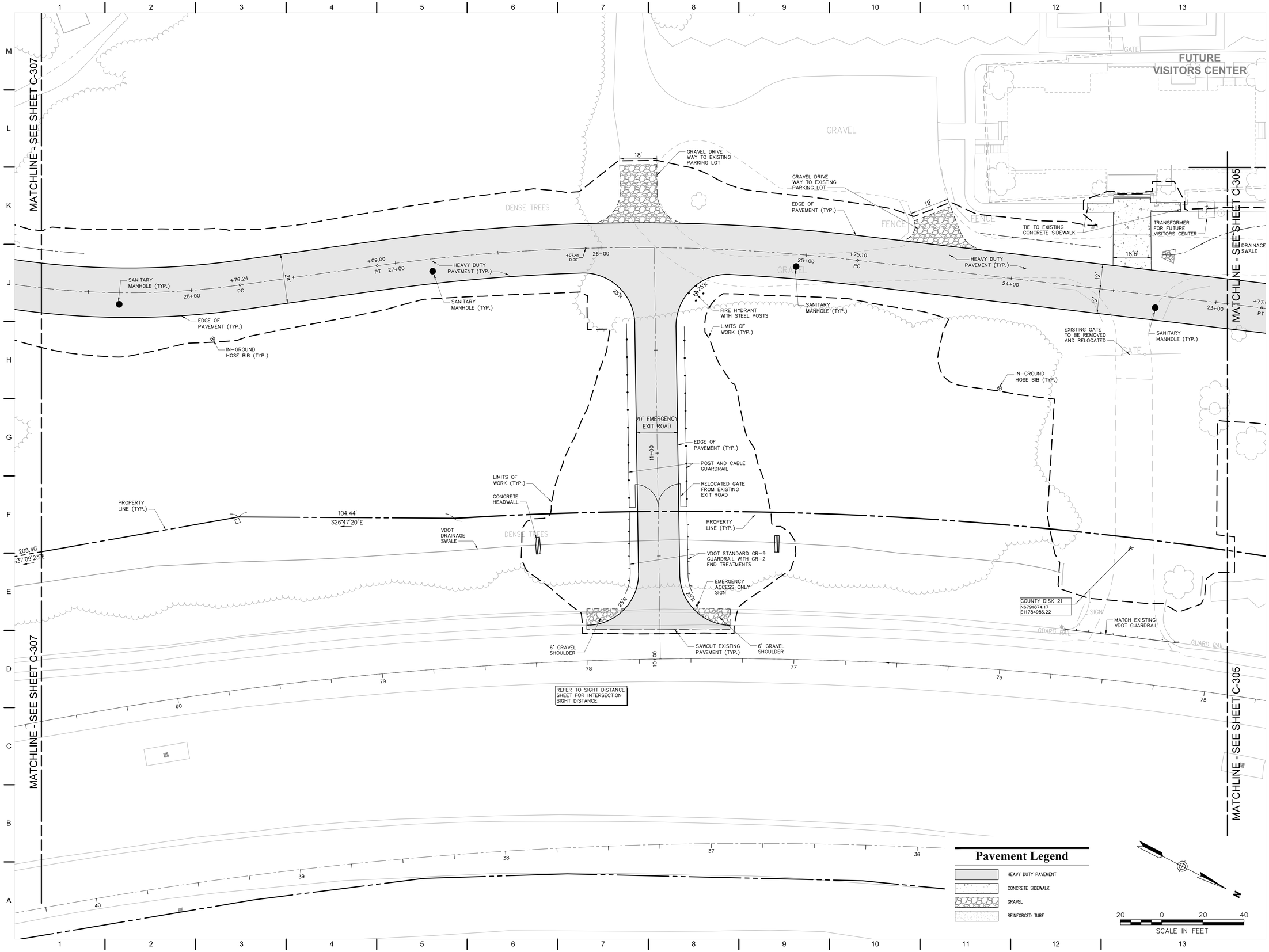

QUINN EVANS ARCHITECTS

2121 WARD PLACE, NW
FOURTH FLOOR
WASHINGTON, DC 20036

v 202 298 6700
f 202 298 6666

WWW.QUINNEVANS.COM

vhb

115 SOUTH 15TH STREET
SUITE 200
RICHMOND, VIRGINIA 23219

804.343.7100 | FAX 804.343.1713

FERRY FARM PHASE 1 IMPROVEMENTS

268 Kings Hwy, Fredericksburg, VA 22405

QEA # 31402900

Layout and Materials Plan

COMMONWEALTH OF VIRGINIA
JOHN P. CARTY
Lic. No. 039452
12/19/14
PROFESSIONAL ENGINEER

SITE PERMIT SUBMISSION
12/19/14

REVISIONS

NO.	DESCRIPTION	DATE

C-306

\\RICHVA\PROJECTS\37912\07 QEA FERRY FARM PHASE I\CADD\PLANSET\37912.07-LM
12/9/2014 5:09:41 PM

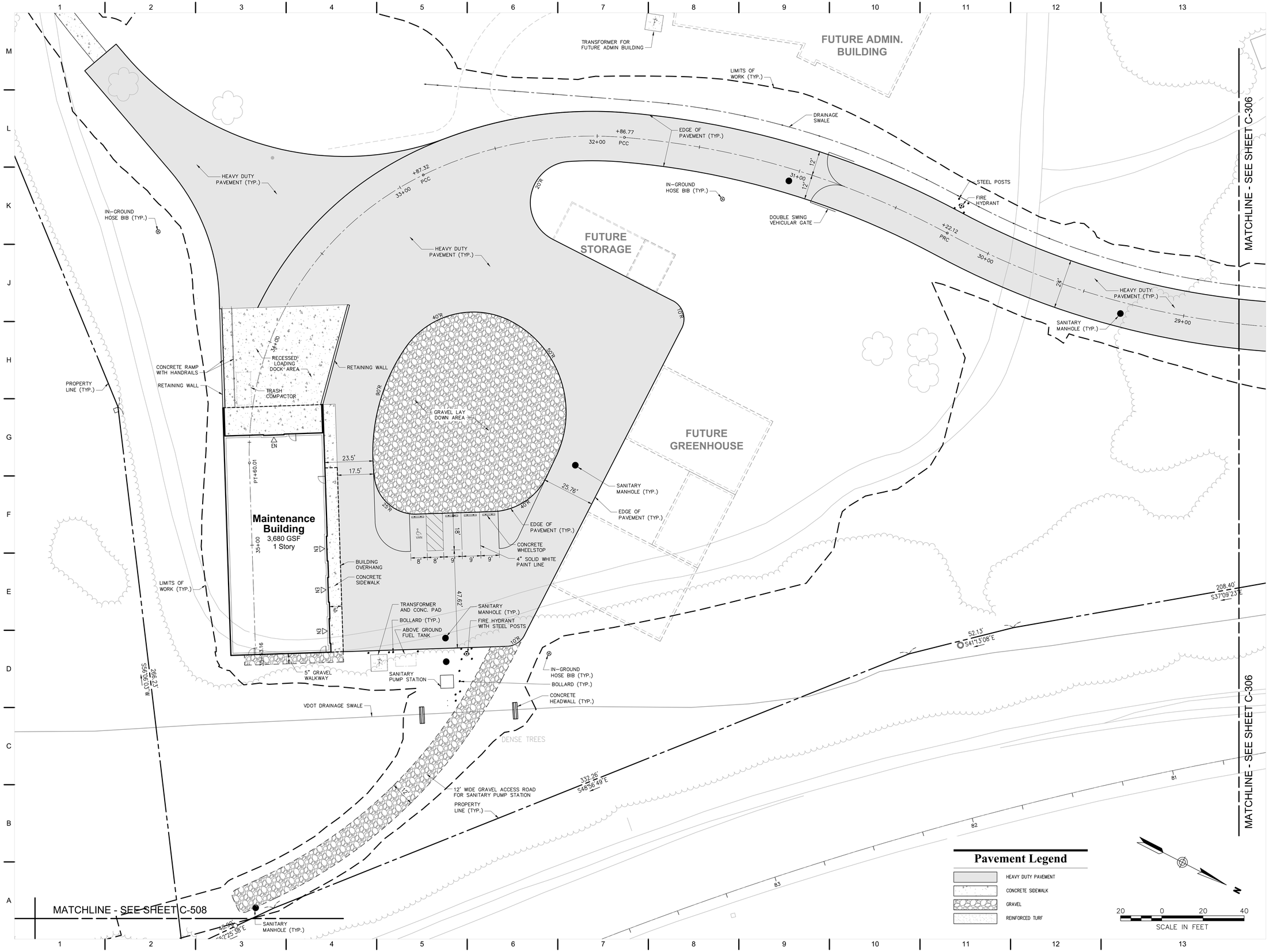

QUINN EVANS ARCHITECTS

2121 WARD PLACE, NW
FOURTH FLOOR
WASHINGTON, DC 20036

v 202 298 6700
f 202 298 6666

WWW.QUINNEVANS.COM

vhb

115 SOUTH 15TH STREET
SUITE 200
RICHMOND, VIRGINIA 23219

804.343.7100 | FAX 804.343.1713

FERRY FARM PHASE 1 IMPROVEMENTS

268 Kings Hwy, Fredericksburg, VA 22405

QEA # 31402900

Layout and Materials Plan

COMMONWEALTH OF VIRGINIA
JOHN P. CARTY
Lic. No. 039452
12/19/14
PROFESSIONAL ENGINEER

SITE PERMIT SUBMISSION
12/19/14

REVISIONS

NO.	DESCRIPTION	DATE

C-307

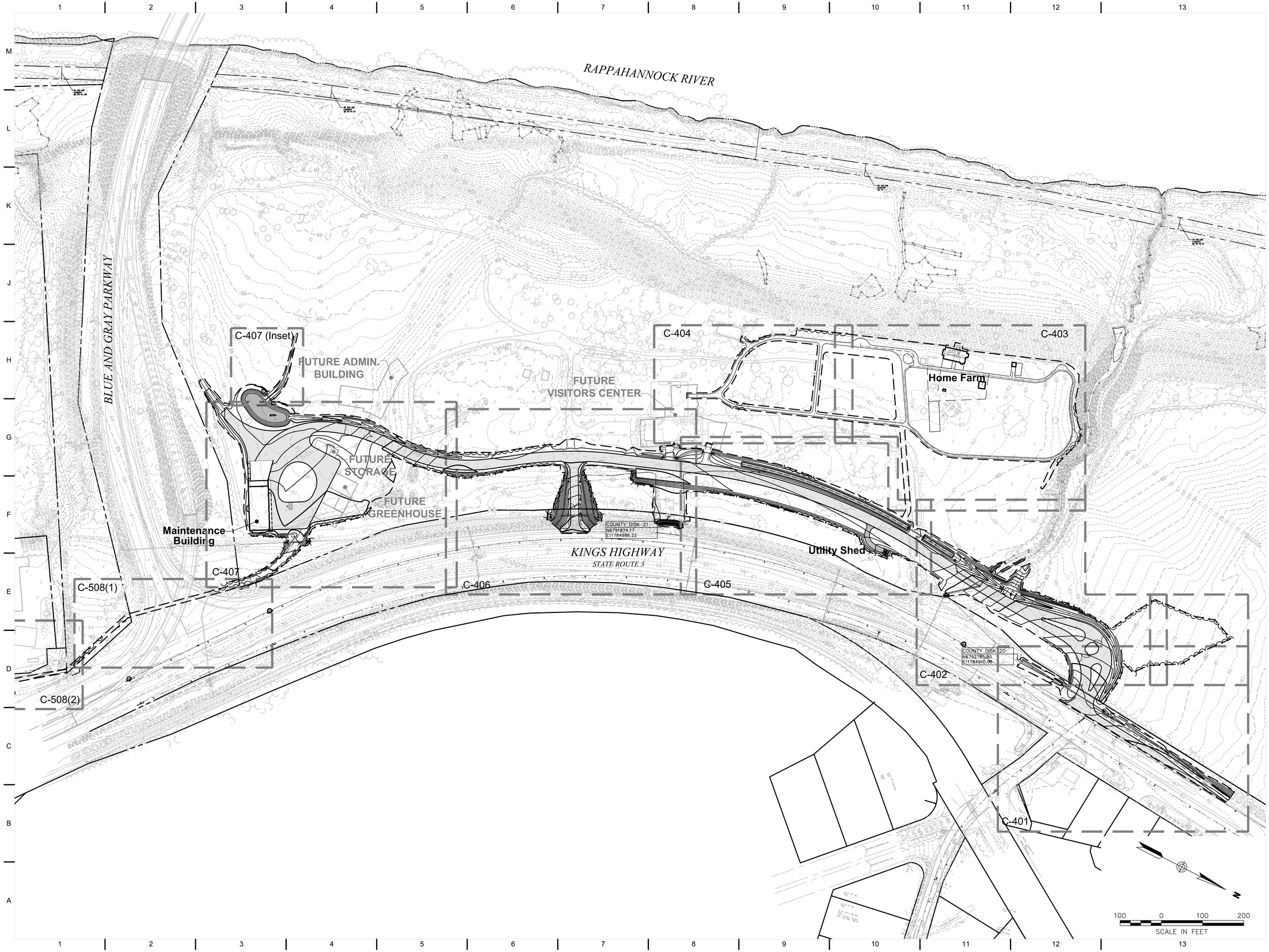

QUINN EVANS ARCHITECTS

2121 WARD PLACE, NW
FOURTH FLOOR
WASHINGTON, DC 20036

v 202 298 6700
f 202 298 6666

WWW.QUINNEVANS.COM

vhb

115 SOUTH 15TH STREET
SUITE 200
RICHMOND, VIRGINIA 23219

804.343.7100 | FAX 804.343.1713

FERRY FARM PHASE 1 IMPROVEMENTS

268 Kings Hwy, Fredericksburg, VA 22405

QEA # 31402900

Overall Grading Plan

COMMONWEALTH OF VIRGINIA
JOHN P. CARTY
Lic. No. 039452
12/19/14
PROFESSIONAL ENGINEER

SITE PERMIT SUBMISSION
12/19/14

REVISIONS

NO.	DESCRIPTION	DATE

C-400

12/19/2014 5:09:41 PM \\VHBPROJ\RICHMOND\37912.07 QEA FERRY FARM PHASE I\CAD\LDP\PLANSET\37912.07-CD

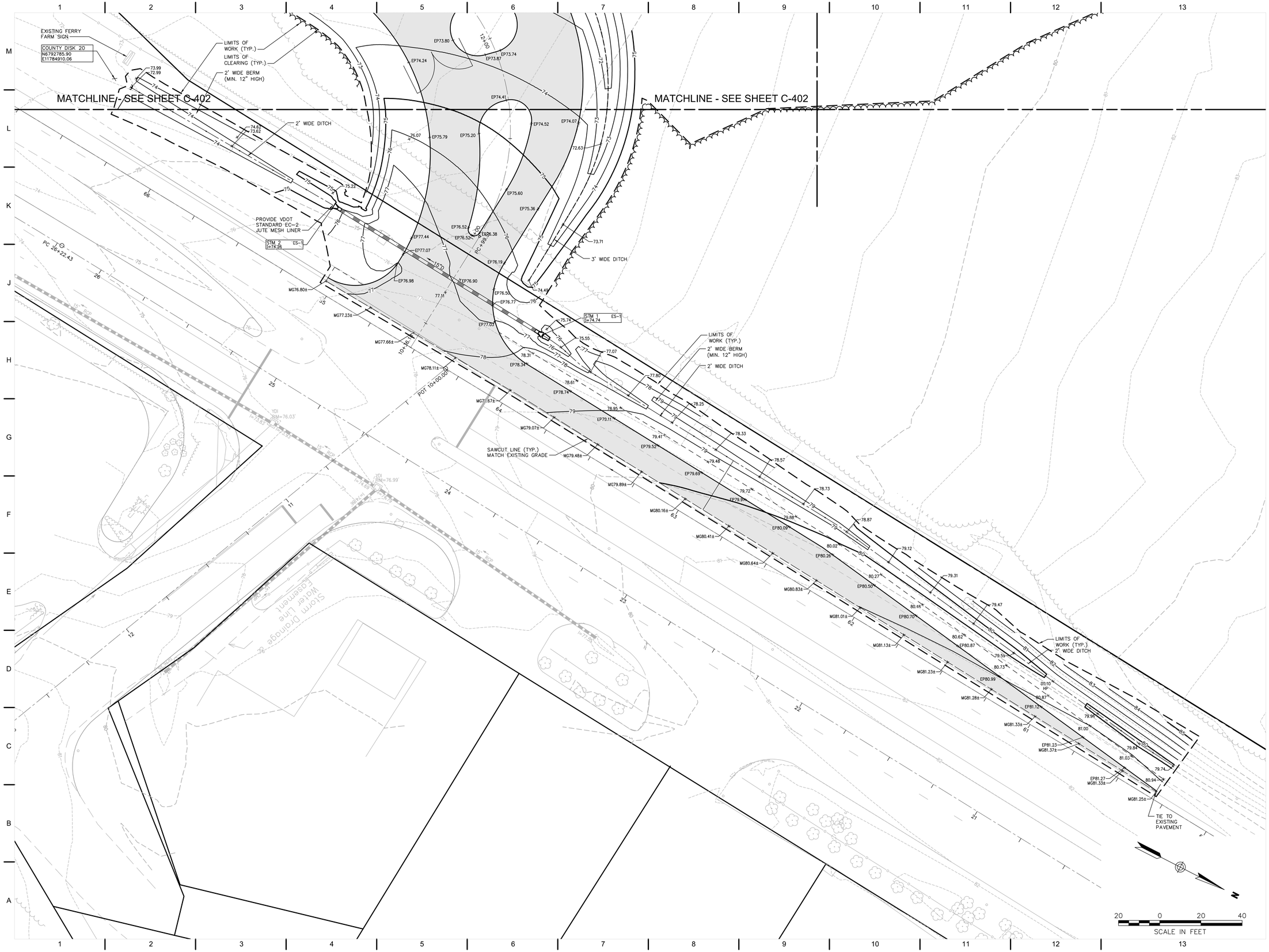

QUINN EVANS ARCHITECTS

2121 WARD PLACE, NW
FOURTH FLOOR
WASHINGTON, DC 20036

v 202 298 6700
f 202 298 6666

WWW.QUINNEVANS.COM

vhb

115 SOUTH 15TH STREET
SUITE 200
RICHMOND, VIRGINIA 23219

804.343.7100 | FAX 804.343.1713

FERRY FARM PHASE 1 IMPROVEMENTS

268 Kings Hwy, Fredericksburg, VA 22405

QEA # 31402900

Grading Plan

COMMONWEALTH OF VIRGINIA
JOHN P. CARTY
Lic. No. 039452
12/19/14
PROFESSIONAL ENGINEER

SITE PERMIT SUBMISSION
12/19/14

REVISIONS

NO.	DESCRIPTION	DATE

C-401

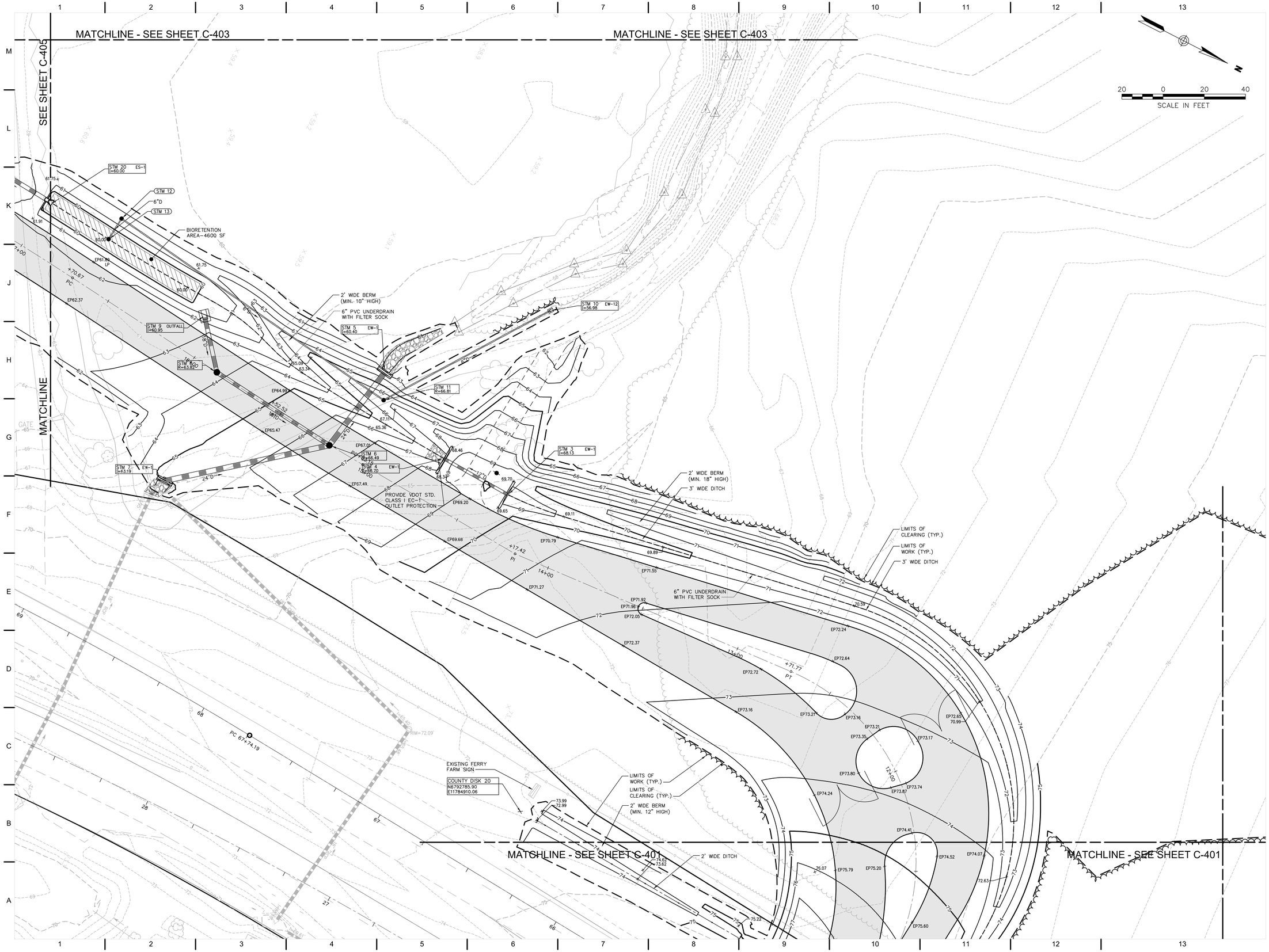

QUINN EVANS ARCHITECTS

2121 WARD PLACE, NW
FOURTH FLOOR
WASHINGTON, DC 20036

v 202 298 6700
f 202 298 6666

WWW.QUINNEVANS.COM

vhb

115 SOUTH 15TH STREET
SUITE 200
RICHMOND, VIRGINIA 23219

804.343.7100 | FAX 804.343.1713

FERRY FARM PHASE 1 IMPROVEMENTS

268 Kings Hwy, Fredericksburg, VA 22405

QEA # 31402900

Grading Plan

COMMONWEALTH OF VIRGINIA
JOHN P. CARTY
Lic. No. 039452
12/19/14
PROFESSIONAL ENGINEER

SITE PERMIT SUBMISSION
12/19/14

REVISIONS

NO.	DESCRIPTION	DATE

C-402

12/9/2014 5:09:41 PM \\VHBPROJ\RICHMOND\37912.07 QEA FERRY FARM PHASE I\CAD\LDP\LANSE\37912.07-C2D

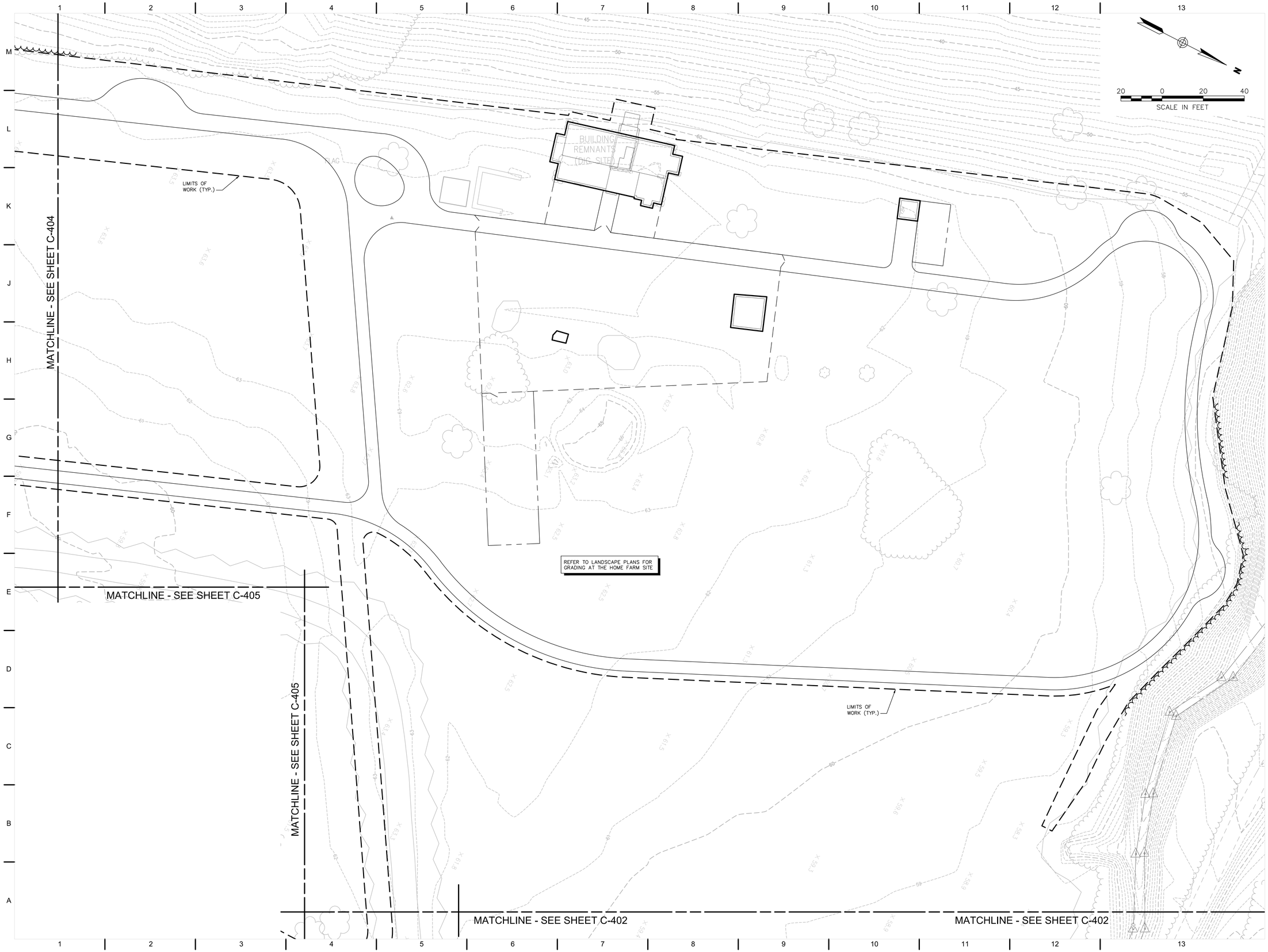

QUINN EVANS ARCHITECTS

2121 WARD PLACE, NW
FOURTH FLOOR
WASHINGTON, DC 20036

v 202 298 6700
f 202 298 6666

WWW.QUINNEVANS.COM

vhb

115 SOUTH 15TH STREET
SUITE 200
RICHMOND, VIRGINIA 23219

804.343.7100 | FAX 804.343.1713

FERRY FARM PHASE 1 IMPROVEMENTS

268 Kings Hwy, Fredericksburg, VA 22405

QEA # 31402900

Grading Plan

COMMONWEALTH OF VIRGINIA
JOHN P. CARTY
Lic. No. 039452
12/19/14
PROFESSIONAL ENGINEER

SITE PERMIT SUBMISSION
12/19/14

REVISIONS

NO.	DESCRIPTION	DATE

C-403

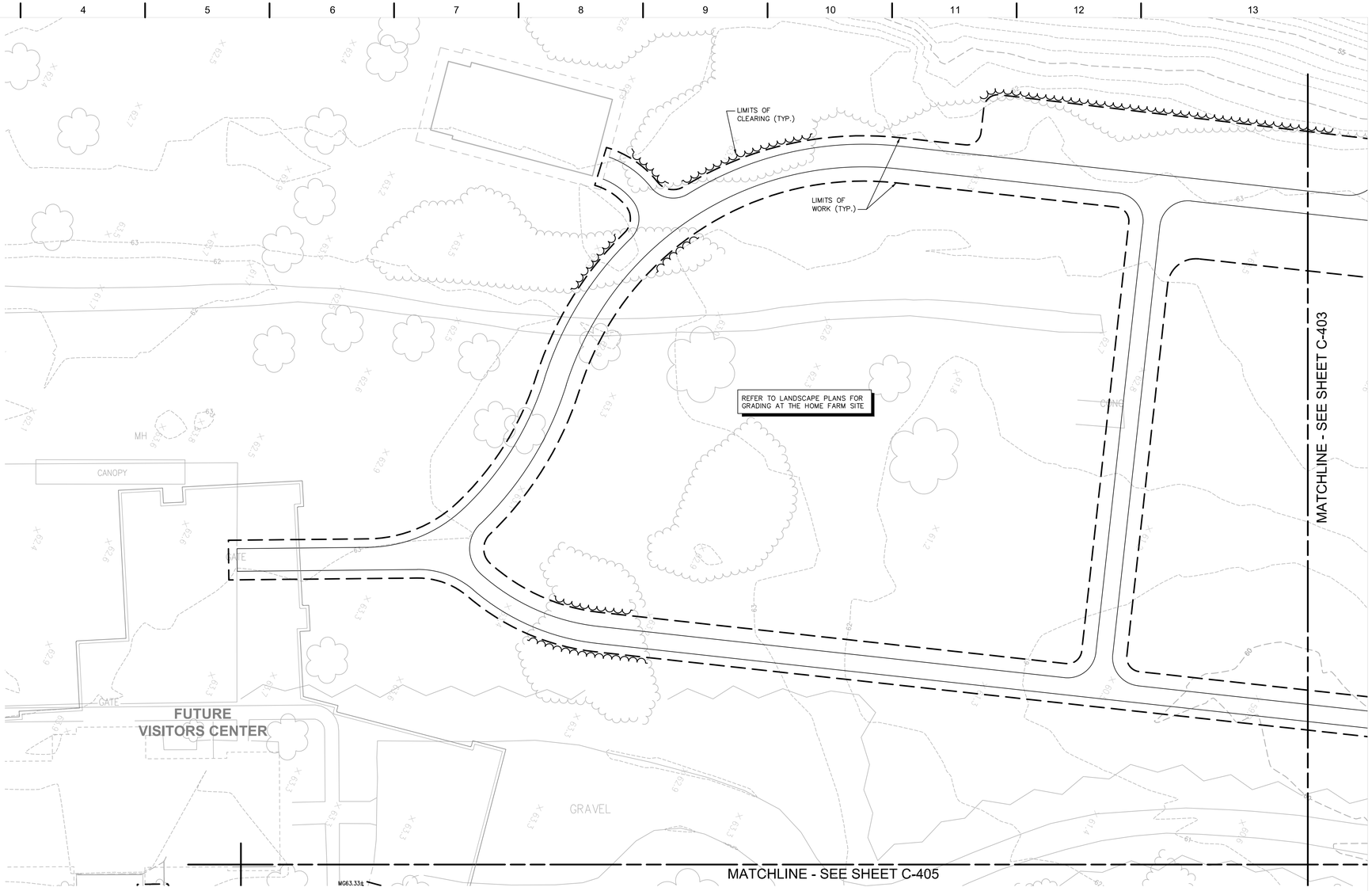

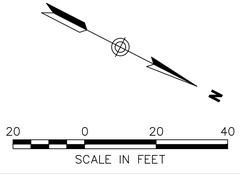

QUINN EVANS ARCHITECTS

2121 WARD PLACE, NW
FOURTH FLOOR
WASHINGTON, DC 20036

v 202 298 6700
f 202 298 6666

WWW.QUINNEVANS.COM

vhb

115 SOUTH 15TH STREET
SUITE 200
RICHMOND, VIRGINIA 23219

804.343.7100 | FAX 804.343.1713

FERRY FARM PHASE 1 IMPROVEMENTS

268 Kings Hwy, Fredericksburg, VA 22405

QEA # 31402900

Grading Plan

COMMONWEALTH OF VIRGINIA
JOHN P. CARTY
Lic. No. 039452
12/19/14
PROFESSIONAL ENGINEER

SITE PERMIT SUBMISSION
12/19/14

REVISIONS

NO.	DESCRIPTION	DATE

C-404

\\VHBPROJ\RICHMOND\37912.07 QEA FERRY FARM PHASE I\CAD\LDP\LANSET\37912.07-C2D

12/9/2014 5:09:41 PM

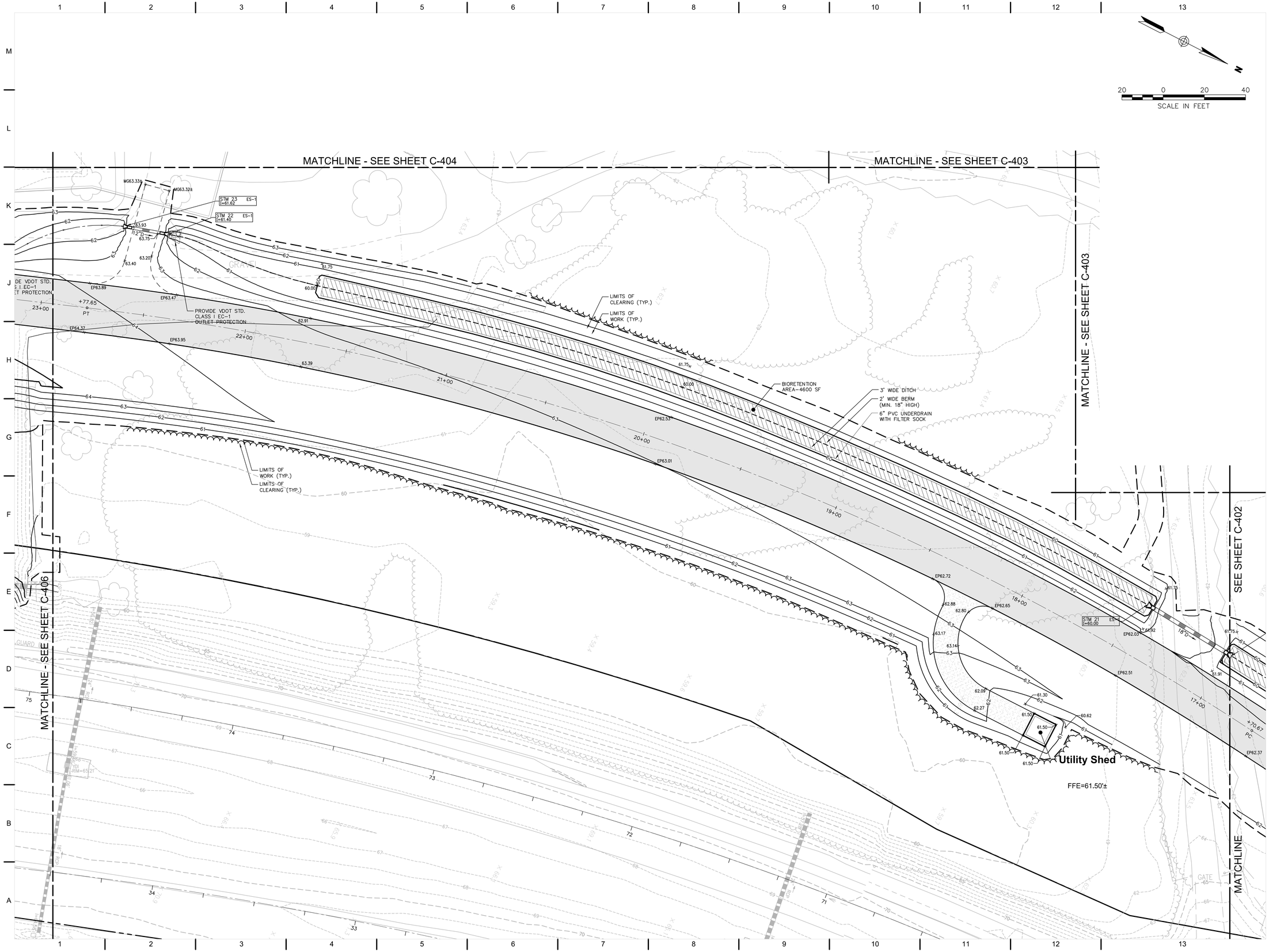

QUINN EVANS ARCHITECTS

2121 WARD PLACE, NW
FOURTH FLOOR
WASHINGTON, DC 20036

v 202 298 6700
f 202 298 6666

WWW.QUINNEVANS.COM

vhb

115 SOUTH 15TH STREET
SUITE 200
RICHMOND, VIRGINIA 23219

804.343.7100 | FAX 804.343.1713

FERRY FARM PHASE 1 IMPROVEMENTS

268 Kings Hwy, Fredericksburg, VA 22405

QEA # 31402900

Grading Plan

COMMONWEALTH OF VIRGINIA
JOHN P. CARTY
Lic. No. 039452
12/19/14
PROFESSIONAL ENGINEER

SITE PERMIT SUBMISSION
12/19/14

REVISIONS

NO.	DESCRIPTION	DATE

C-405

12/9/2014 5:09:41 PM \\VHBPROJ\RICHMOND\37912.07 QEA FERRY FARM PHASE I\CADD\PLANSET\37912.07-CD

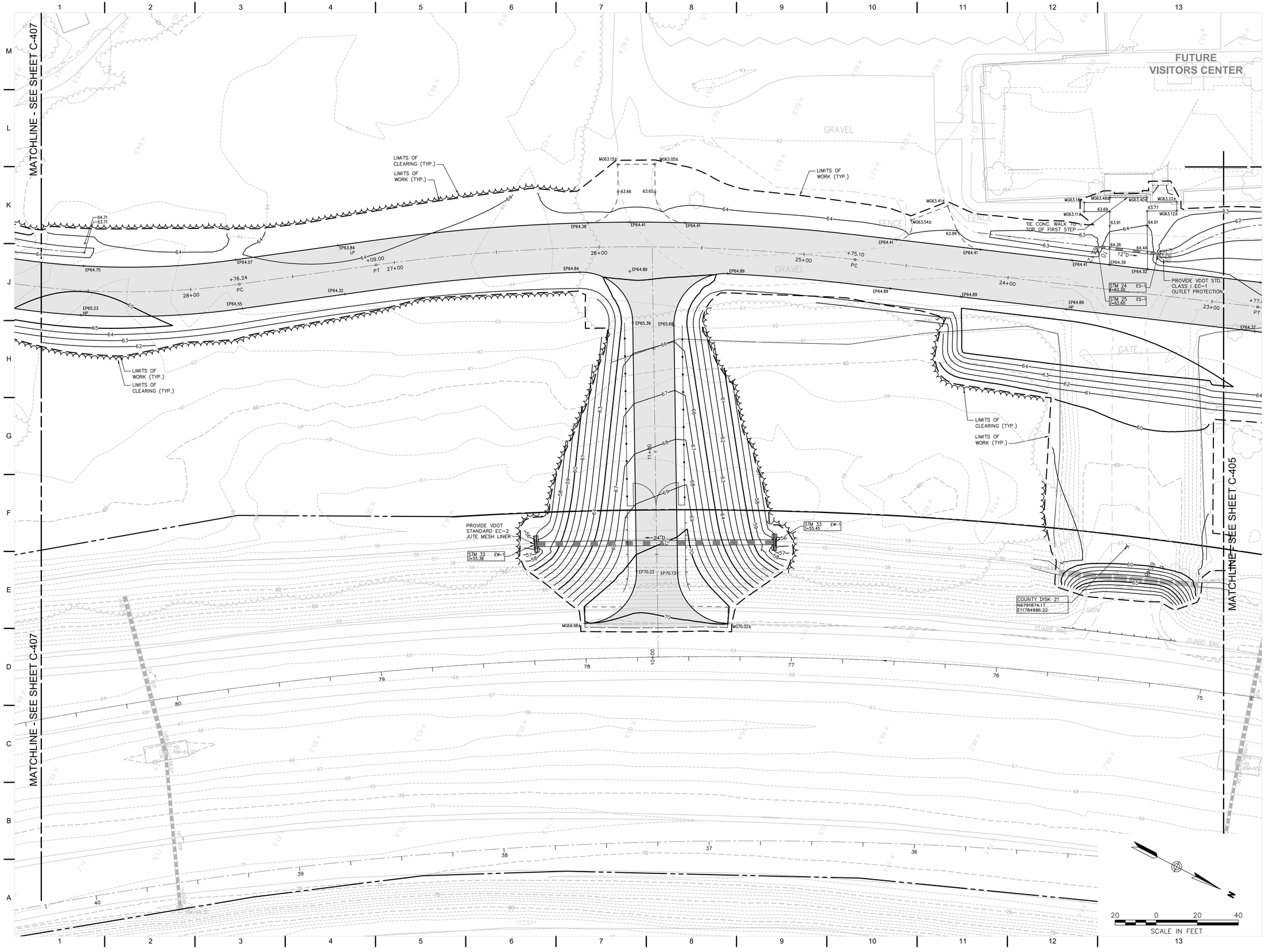

QUINN EVANS ARCHITECTS

2121 WARD PLACE, NW
FOURTH FLOOR
WASHINGTON, DC 20036

v 202 298 6700
f 202 298 6666

WWW.QUINNEVANS.COM

vhb

115 SOUTH 15TH STREET
SUITE 200
RICHMOND, VIRGINIA 23219

804.343.7100 | FAX 804.343.1713

FERRY FARM PHASE 1 IMPROVEMENTS

268 Kings Hwy, Fredericksburg, VA 22405

QEA # 31402900

Grading Plan

COMMONWEALTH OF VIRGINIA
JOHN P. GARTY
Lic. No. 039452
12/19/14
PROFESSIONAL ENGINEER

SITE PERMIT SUBMISSION
12/19/14

REVISIONS

NO.	DESCRIPTION	DATE

C-406

QUINN EVANS ARCHITECTS

2121 WARD PLACE, NW
FOURTH FLOOR
WASHINGTON, DC 20036

v 202 298 6700
f 202 298 6666

WWW.QUINNEVANS.COM

vhb

115 SOUTH 15TH STREET
SUITE 200
RICHMOND, VIRGINIA 23219

804.343.7100 | FAX 804.343.1713

FERRY FARM PHASE 1 IMPROVEMENTS

268 Kings Hwy, Fredericksburg, VA 22405

QEA # 31402900

Grading Plan

COMMONWEALTH OF VIRGINIA
JOHN P. CARTY
Lic. No. 039452
12/19/14
PROFESSIONAL ENGINEER

SITE PERMIT SUBMISSION
12/19/14

REVISIONS

NO.	DESCRIPTION	DATE

C-407

\\RICHVA\PROJECTS\37912\07 QEA FERRY FARM PHASE I\CAD\LDP\PLANSET\37912-07.CD
12/9/2014 5:09:41 PM

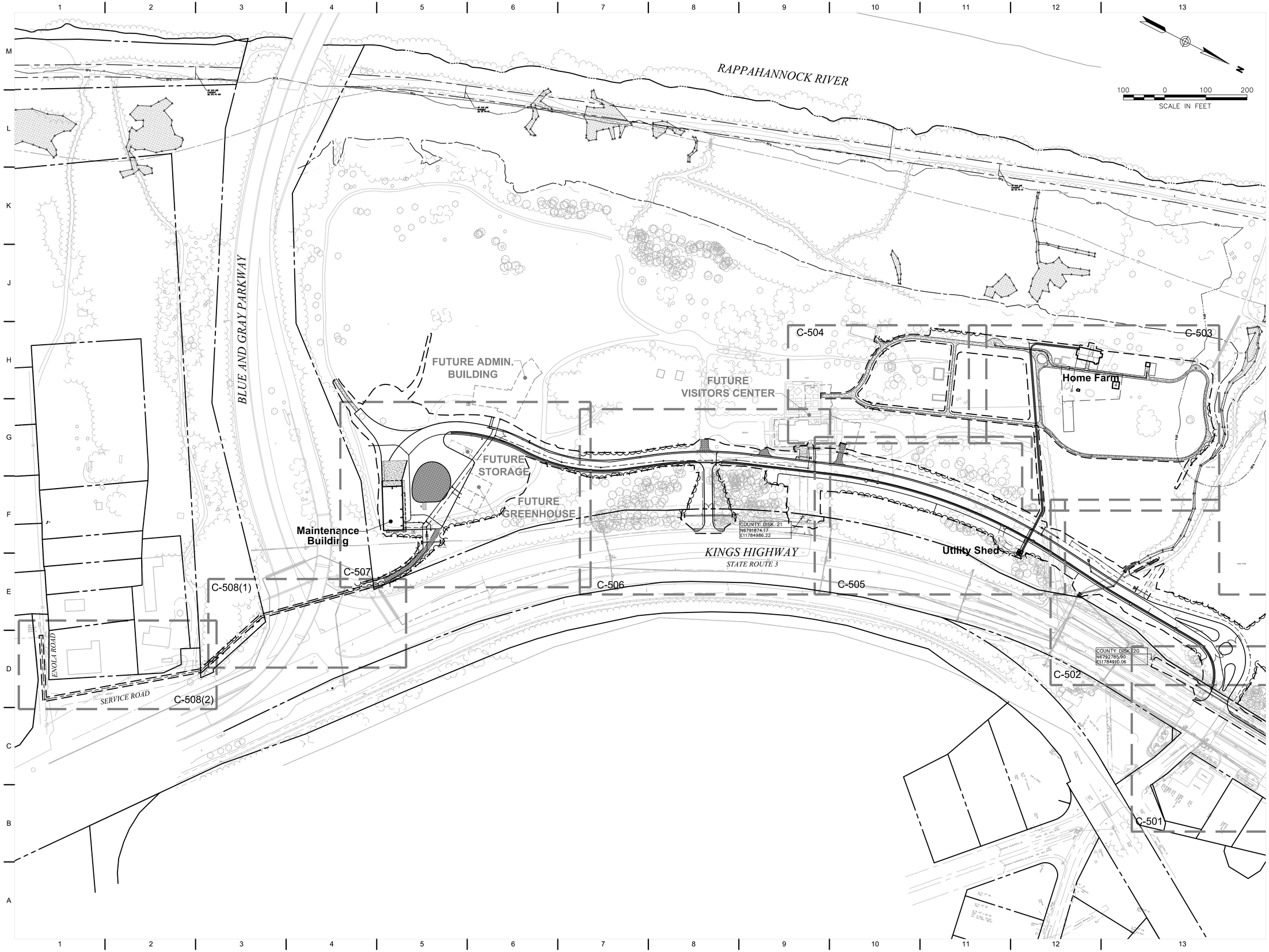

QUINN EVANS ARCHITECTS

2121 WARD PLACE, NW
FOURTH FLOOR
WASHINGTON, DC 20036

v 202 298 6700
f 202 298 6666

WWW.QUINNEVANS.COM

vhb

115 SOUTH 15TH STREET
SUITE 200
RICHMOND, VIRGINIA 23219

804.343.7100 | FAX 804.343.1713

FERRY FARM PHASE 1 IMPROVEMENTS

268 Kings Hwy, Fredericksburg, VA 22405

QEA # 31402900

Overall Utility Plan

COMMONWEALTH OF VIRGINIA
JOHN P. CARTY
Lic. No. 039452
12/19/14
PROFESSIONAL ENGINEER

SITE PERMIT SUBMISSION
12/19/14

REVISIONS

NO.	DESCRIPTION	DATE

C-500

12/9/2014 5:09:41 PM I:\RICHVA\PROJECTS\37912.07 QEA FERRY FARM PHASE IC\ACAD\PLANSET\37912.07.UT

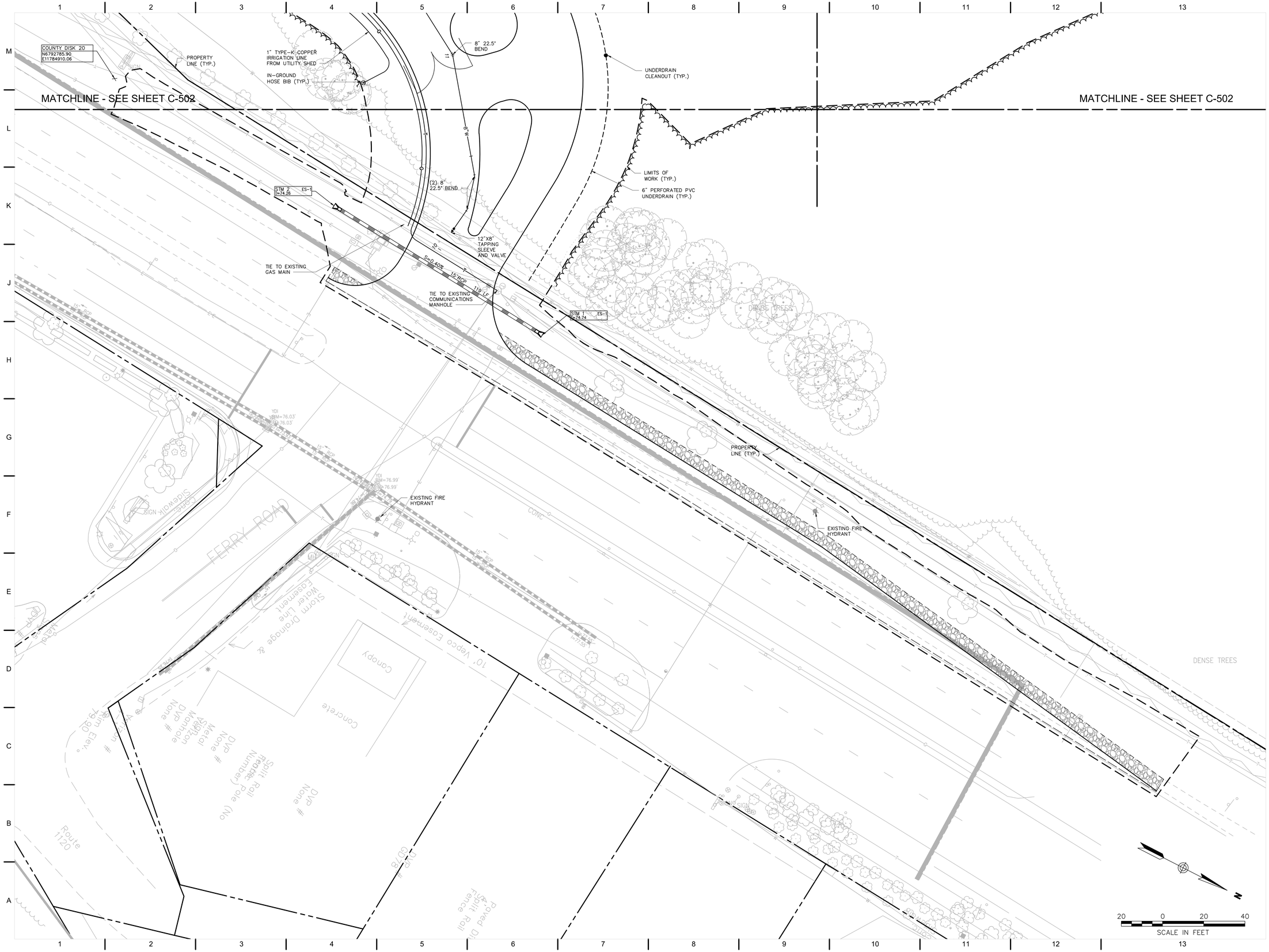

QUINN EVANS ARCHITECTS

2121 WARD PLACE, NW
FOURTH FLOOR
WASHINGTON, DC 20036

v 202 298 6700
f 202 298 6666

WWW.QUINNEVANS.COM

vhb

115 SOUTH 15TH STREET
SUITE 200
RICHMOND, VIRGINIA 23219

804.343.7100 | FAX 804.343.1713

FERRY FARM PHASE 1 IMPROVEMENTS

268 Kings Hwy, Fredericksburg, VA 22405

QEA # 31402900

Utility Plan

COMMONWEALTH OF VIRGINIA
JOHN P. CARTY
Lic. No. 039452
12/19/14
PROFESSIONAL ENGINEER

SITE PERMIT SUBMISSION
12/19/14

REVISIONS

NO.	DESCRIPTION	DATE

C-501

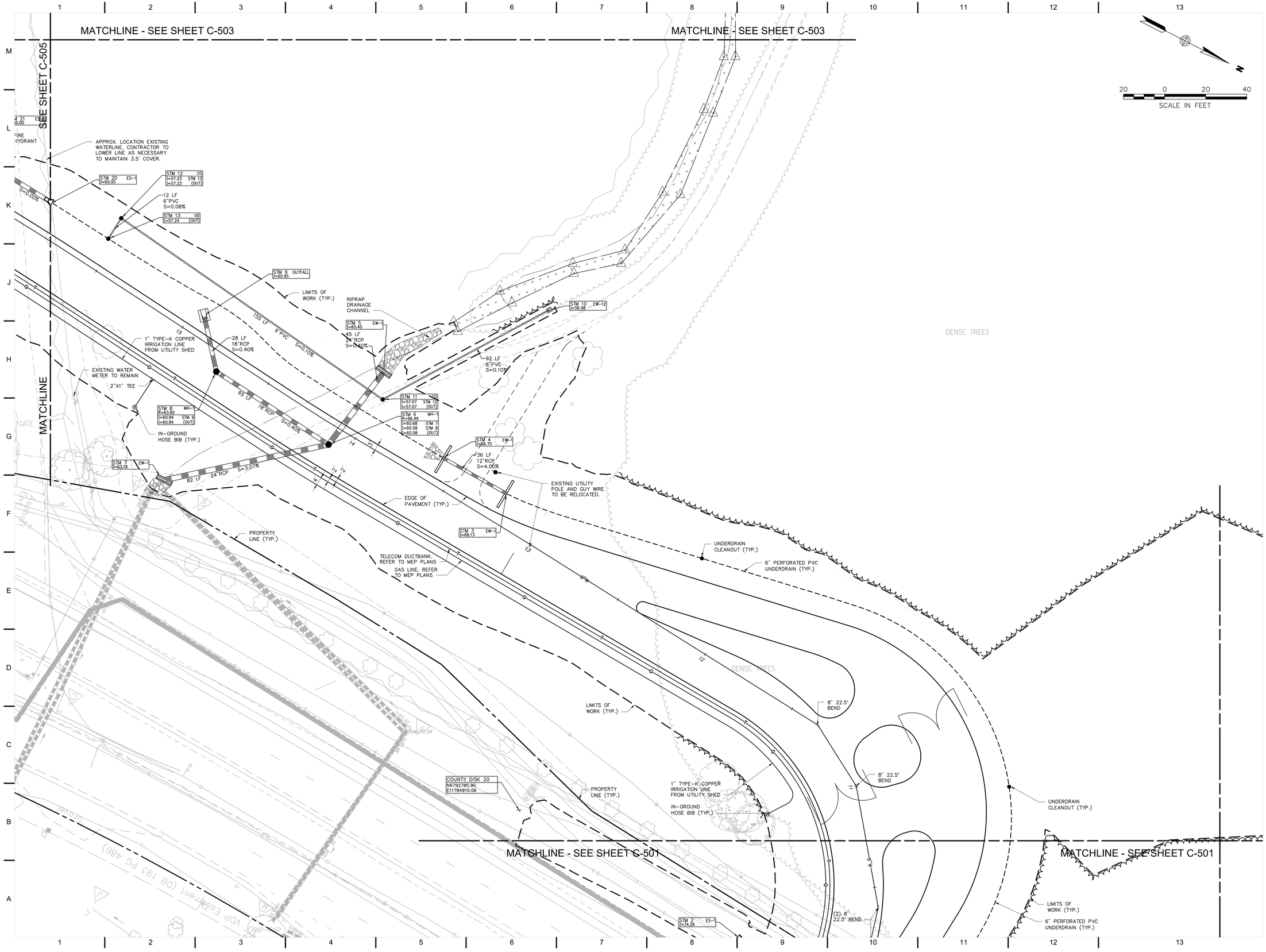

QUINN EVANS ARCHITECTS

2121 WARD PLACE, NW
FOURTH FLOOR
WASHINGTON, DC 20036

v 202 298 6700
f 202 298 6666

WWW.QUINNEVANS.COM

vhb

115 SOUTH 15TH STREET
SUITE 200
RICHMOND, VIRGINIA 23219

804.343.7100 | FAX 804.343.1713

FERRY FARM PHASE 1 IMPROVEMENTS

268 Kings Hwy, Fredericksburg, VA 22405

QEA # 31402900

Utility Plan

COMMONWEALTH OF VIRGINIA
JOHN P. CARTY
Lic. No. 039452
12/19/14
PROFESSIONAL ENGINEER

SITE PERMIT SUBMISSION
12/19/14

REVISIONS

NO.	DESCRIPTION	DATE

C-502

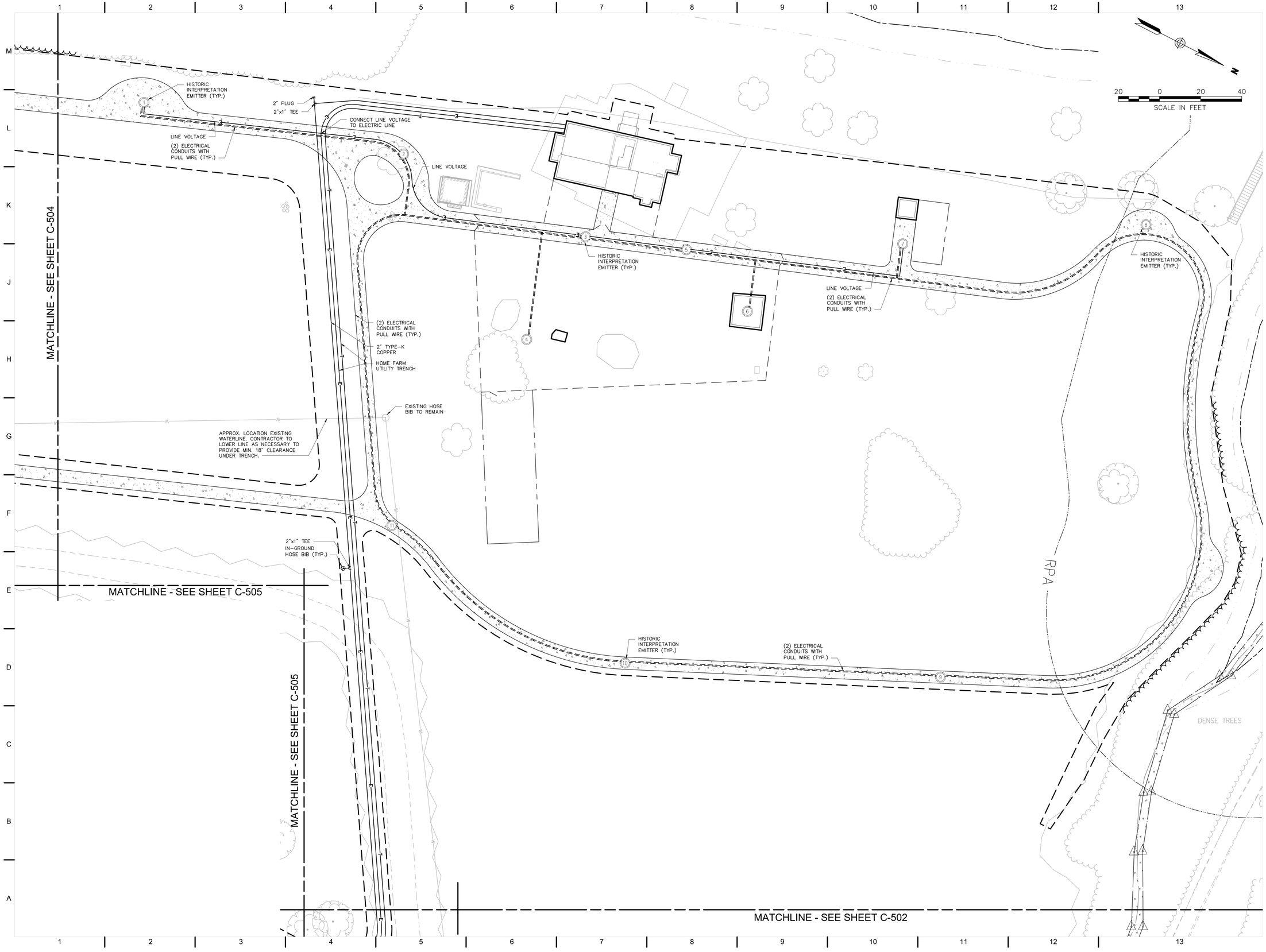

QUINN EVANS ARCHITECTS

2121 WARD PLACE, NW
FOURTH FLOOR
WASHINGTON, DC 20036

v 202 298 6700
f 202 298 6666

WWW.QUINNEVANS.COM

vhb

115 SOUTH 15TH STREET
SUITE 200
RICHMOND, VIRGINIA 23219

804.343.7100 | FAX 804.343.1713

FERRY FARM PHASE 1 IMPROVEMENTS

268 Kings Hwy, Fredericksburg, VA 22405

QEA # 31402900

Utility Plan

COMMONWEALTH OF VIRGINIA
JOHN P. CARTY
Lic. No. 039452
12/19/14
PROFESSIONAL ENGINEER

SITE PERMIT SUBMISSION
12/19/14

REVISIONS

NO.	DESCRIPTION	DATE

C-503

12/9/2014 5:09:41 PM \\RICHVA\PROJECTS\37912-07 QEA FERRY FARM PHASE 1\CAD\LDP\PLANSET\37912-07-UT

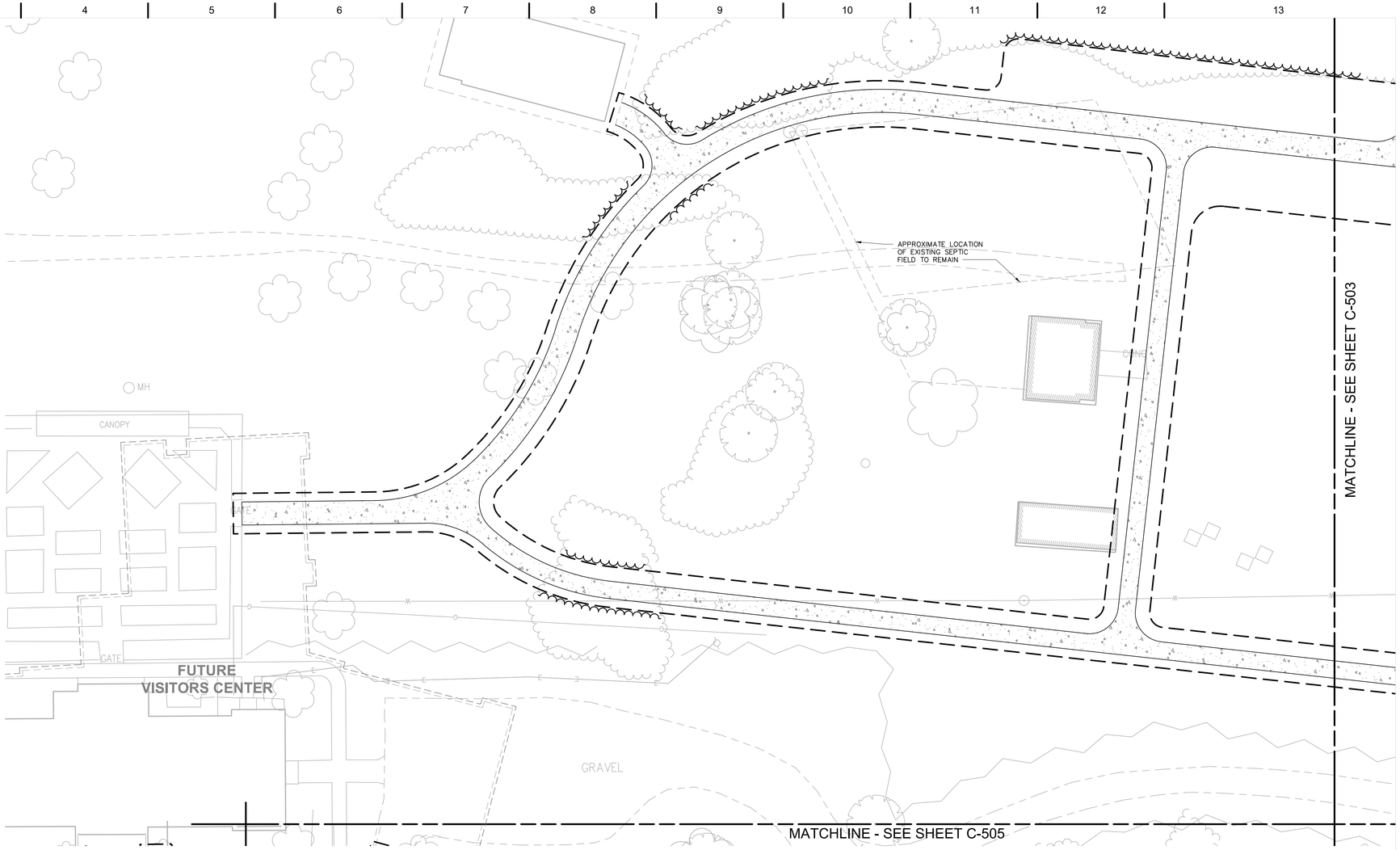

20 0 20 40
SCALE IN FEET

QUINN EVANS
ARCHITECTS

2121 WARD PLACE, NW
FOURTH FLOOR
WASHINGTON, DC 20036

v 202 298 6700
f 202 298 6666

WWW.QUINNEVANS.COM

vhb

115 SOUTH 15TH STREET
SUITE 200
RICHMOND, VIRGINIA 23219

804.343.7100 | FAX 804.343.1713

FERRY FARM PHASE 1 IMPROVEMENTS

268 Kings Hwy, Fredericksburg, VA 22405

QEA # 31402900

Utility Plan

COMMONWEALTH OF VIRGINIA
JOHN P. BARTY
Lic. No. 039452
12/19/14
PROFESSIONAL ENGINEER

SITE PERMIT SUBMISSION
12/19/14

REVISIONS

NO.	DESCRIPTION	DATE

C-504

12/19/2014 5:09:41 PM \\VHBPROJRICHMOND\37912.07 QEA FERRY FARM PHASE I\CAD\LDP\LANSE\37912-07-UT

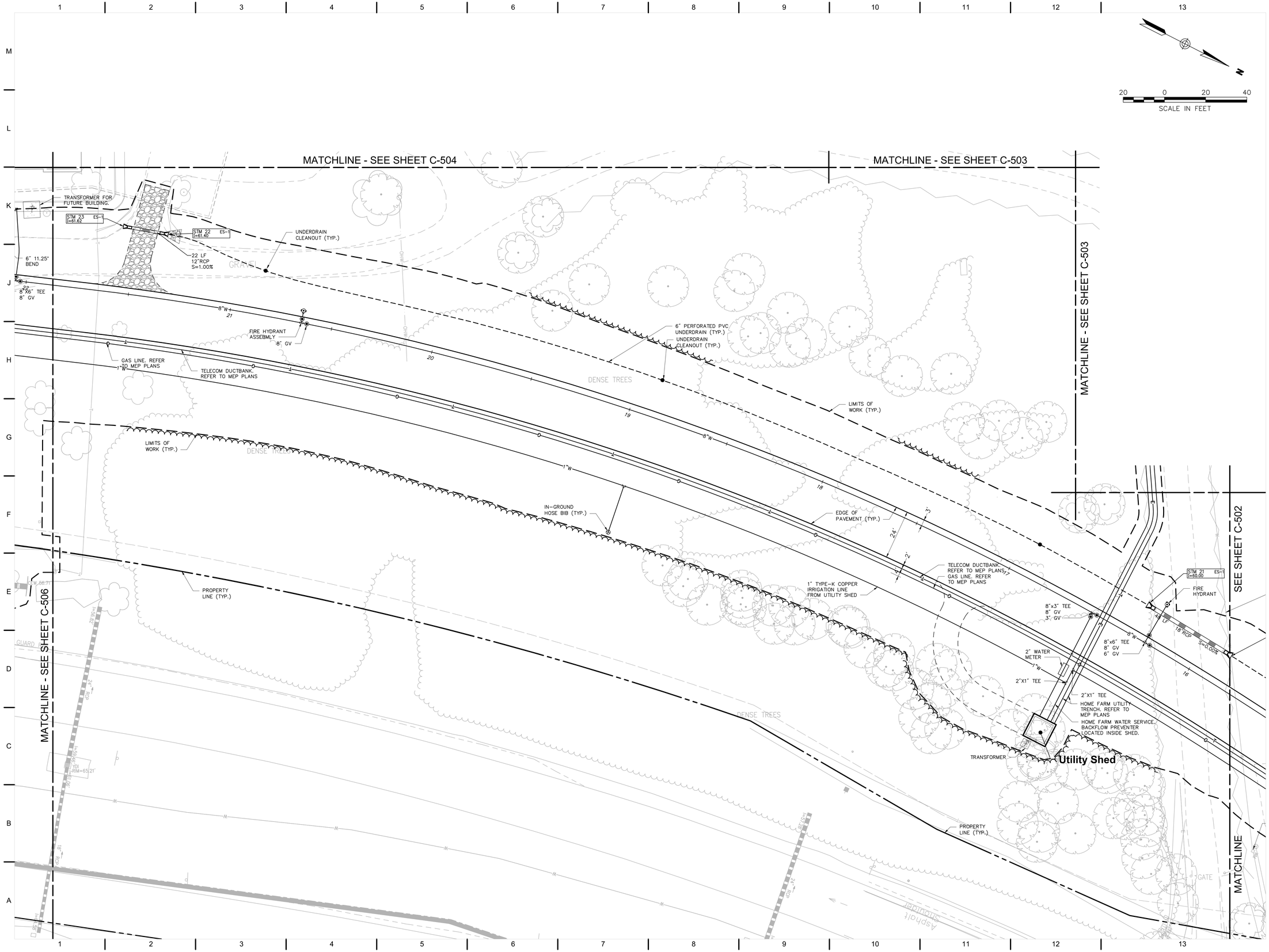

QUINN EVANS ARCHITECTS

2121 WARD PLACE, NW
FOURTH FLOOR
WASHINGTON, DC 20036

v 202 298 6700
f 202 298 6666

WWW.QUINNEVANS.COM

vhb

115 SOUTH 15TH STREET
SUITE 200
RICHMOND, VIRGINIA 23219

804.343.7100 | FAX 804.343.1713

FERRY FARM PHASE 1 IMPROVEMENTS

268 Kings Hwy, Fredericksburg, VA 22405

QEA # 31402900

Utility Plan

COMMONWEALTH OF VIRGINIA
JOHN P. CARTY
Lic. No. 039452
12/19/14
PROFESSIONAL ENGINEER

SITE PERMIT SUBMISSION
12/19/14

REVISIONS

NO.	DESCRIPTION	DATE

C-505

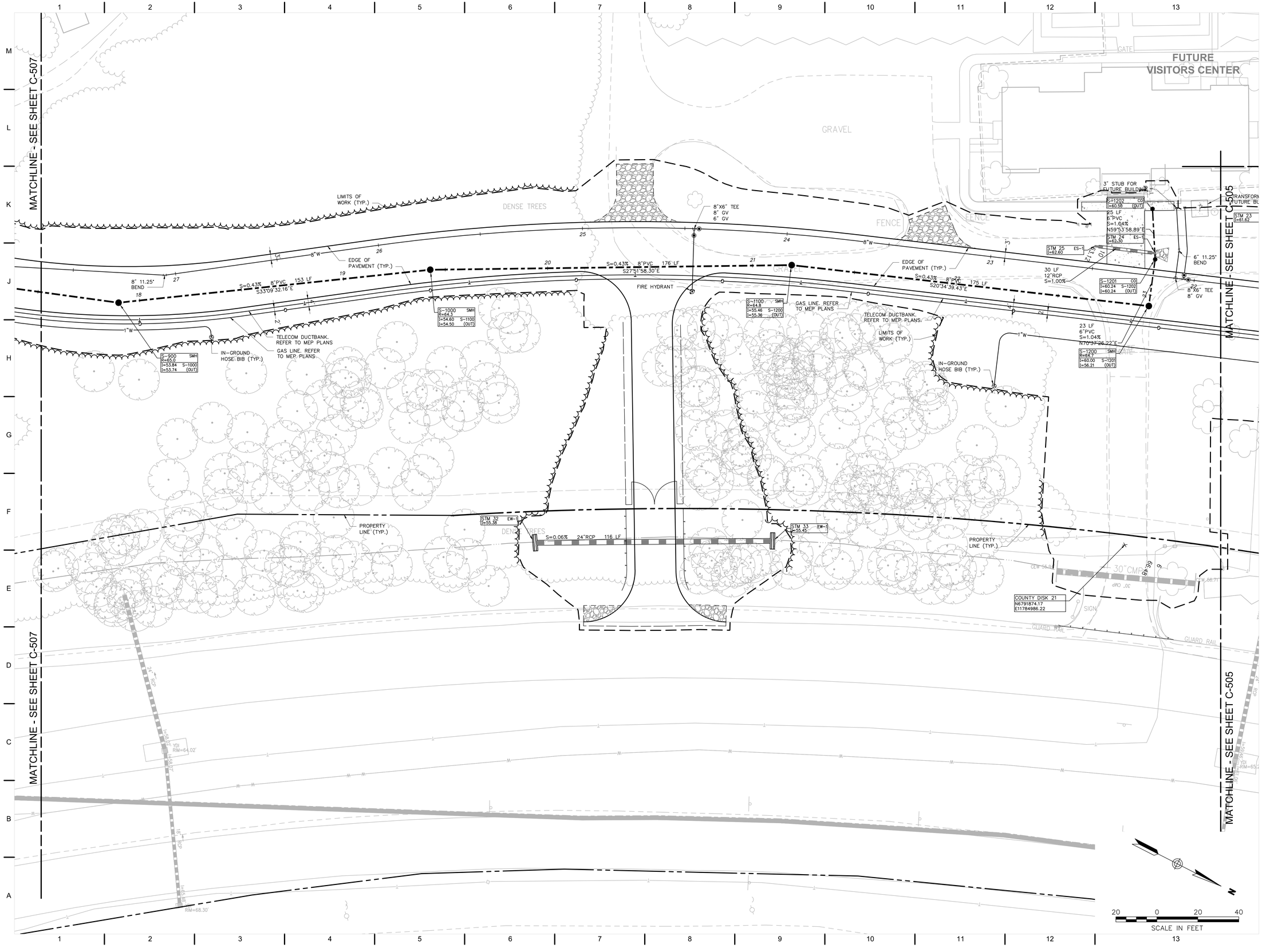

QUINN EVANS ARCHITECTS

2121 WARD PLACE, NW
FOURTH FLOOR
WASHINGTON, DC 20036

v 202 298 6700
f 202 298 6666

WWW.QUINNEVANS.COM

vhb

115 SOUTH 15TH STREET
SUITE 200
RICHMOND, VIRGINIA 23219

804.343.7100 | FAX 804.343.1713

FERRY FARM PHASE 1 IMPROVEMENTS

268 Kings Hwy, Fredericksburg, VA 22405

QEA # 31402900

Utility Plan

COMMONWEALTH OF VIRGINIA
JOHN P. BARTY
Lic. No. 039452
12/19/14
PROFESSIONAL ENGINEER

SITE PERMIT SUBMISSION
12/19/14

REVISIONS

NO.	DESCRIPTION	DATE

C-506

12/9/2014 5:09:41 PM \\VHBPROJ\RICHMOND\37912.07 QEA FERRY FARM PHASE I\CAD\LDP\LANSET\37912-07-UT

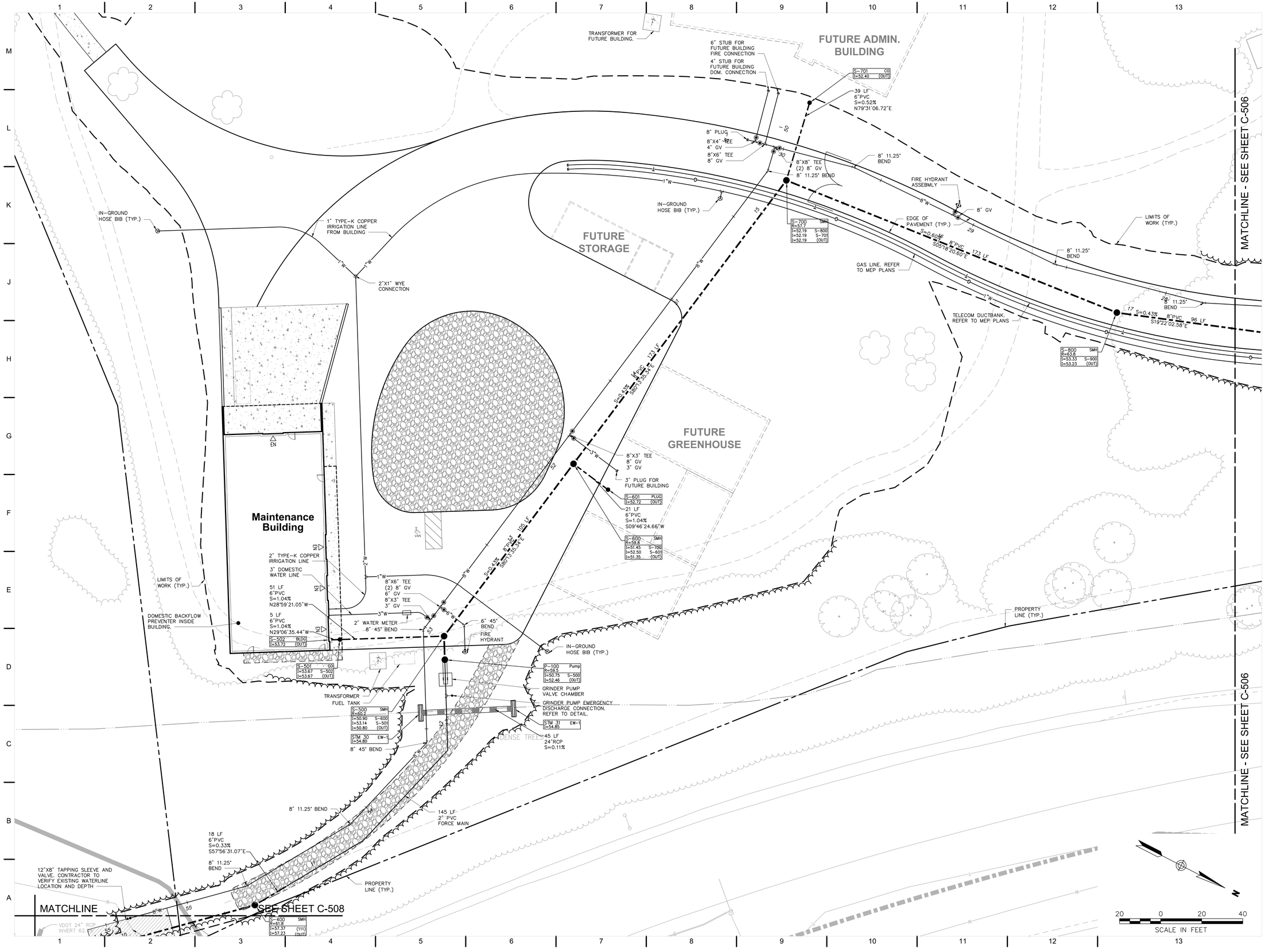

QUINN EVANS ARCHITECTS

2121 WARD PLACE, NW
FOURTH FLOOR
WASHINGTON, DC 20036

v 202 298 6700
f 202 298 6666

WWW.QUINNEVANS.COM

vhb

115 SOUTH 15TH STREET
SUITE 200
RICHMOND, VIRGINIA 23219

804.343.7100 | FAX 804.343.1713

FERRY FARM PHASE 1 IMPROVEMENTS

268 Kings Hwy, Fredericksburg, VA 22405

QEA # 31402900

Utility Plan

COMMONWEALTH OF VIRGINIA
JOHN P. CARTY
Lic. No. 039452
12/19/14
PROFESSIONAL ENGINEER

SITE PERMIT SUBMISSION
12/19/14

REVISIONS

NO.	DESCRIPTION	DATE

C-507

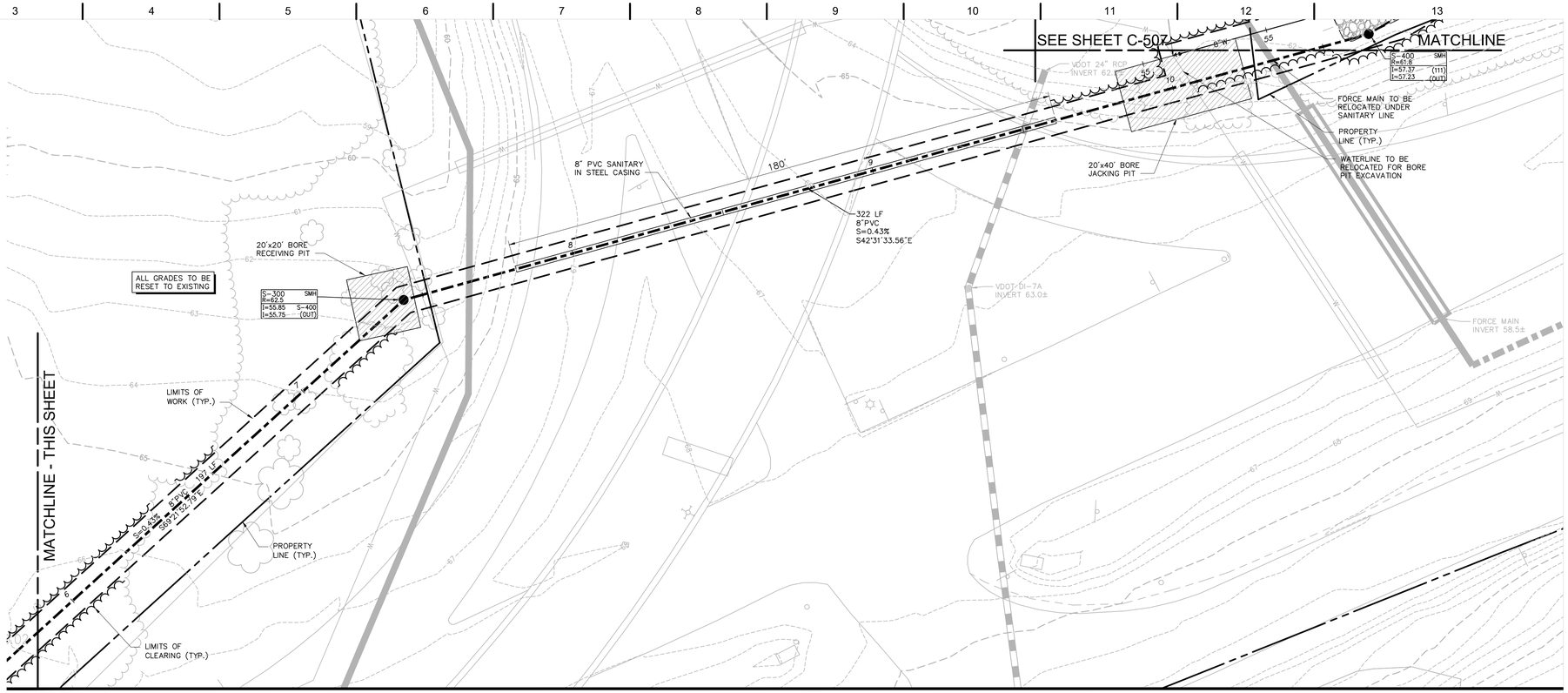

Utility Plan - 1

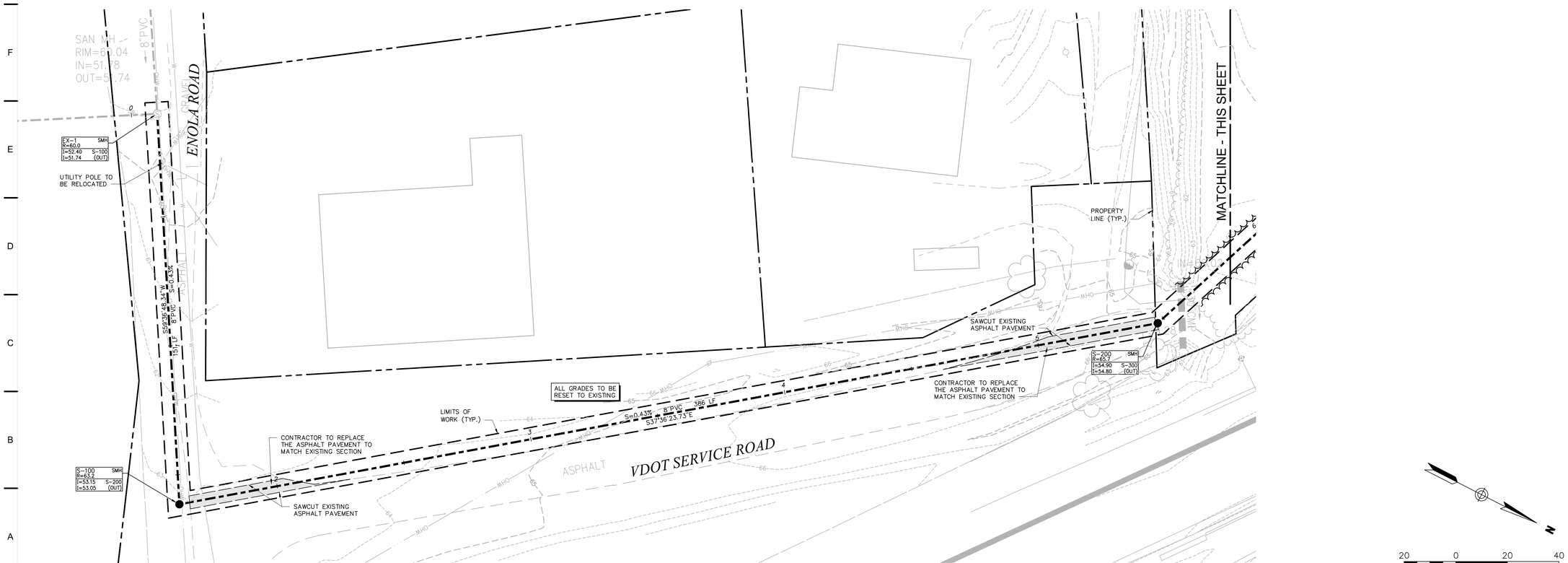

Utility Plan - 2

QUINN EVANS ARCHITECTS

2121 WARD PLACE, NW
FOURTH FLOOR
WASHINGTON, DC 20036

v 202 298 6700
f 202 298 6666

WWW.QUINNEVANS.COM

vhb

115 SOUTH 15TH STREET
SUITE 200
RICHMOND, VIRGINIA 23219

804.343.7100 | FAX 804.343.1713

FERRY FARM PHASE 1 IMPROVEMENTS

268 Kings Hwy, Fredericksburg, VA 22405

QEA # 31402900

Offsite Sanitary Sewer Site Plan

COMMONWEALTH OF VIRGINIA
JOHN P. CARTY
Lic. No. 039452
12/19/14
PROFESSIONAL ENGINEER

SITE PERMIT SUBMISSION
12/19/14

REVISIONS

NO.	DESCRIPTION	DATE

C-508

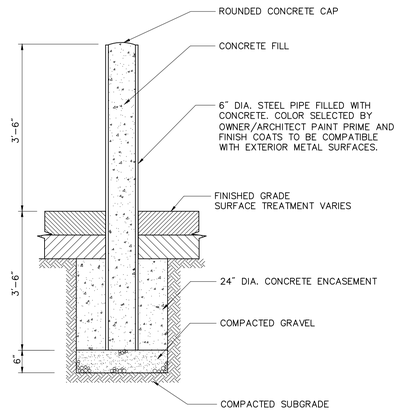

Bollard

6/08

N.T.S. Source: VHB LD_700

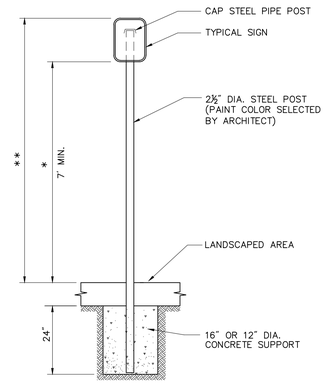

* THIS DIMENSION SHALL BE A MINIMUM OF 5' FOR ACCESSIBLE SIGNAGE.

** THIS DIMENSION SHALL BE A MAXIMUM OF 8' FOR ACCESSIBLE SIGNAGE.

Sign Post - Type 'A'

4/12

N.T.S. Source: VHB LD_701

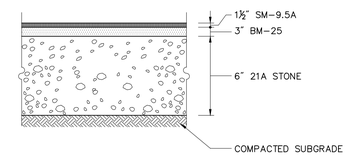

Heavy Duty Flexible Pavement

Note:

PAVEMENT SECTIONS ARE SUBJECT TO CHANGE AND WILL BE BASED ON THE RESULTS OF FURTHER GEOTECHNICAL INVESTIGATIONS.

Bituminous Concrete Pavement Sections

12/11

N.T.S. Source: VHB REV LD_430

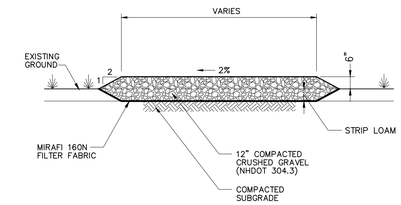

Gravel Driveway

N.T.S. Source: VHB

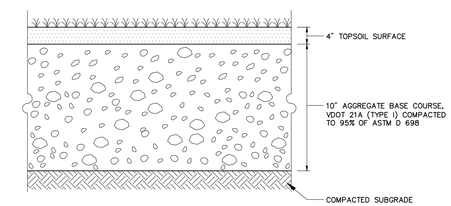

Stabilized Grass Drive Aisle

12/2014

N.T.S. Source: VHB

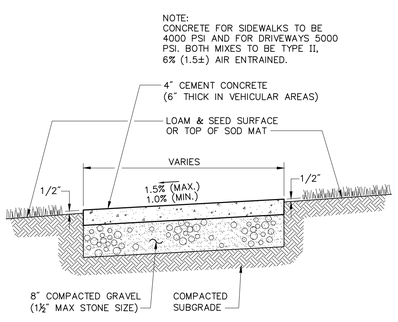

Section

Notes:

1. PROVIDE EXPANSION JOINTS AT MIN. 30 FT. O.C. WITH PRE- FORMED JOINT FILLER.
2. PROVIDE TOOLED CONTROL JOINTS AT 6' O.C.
3. PROVIDE BROOM FINISH IN DIRECTION PERPENDICULAR TO SIDEWALK DIRECTION.

Concrete Sidewalk in Landscape Area

11/12

N.T.S. Source: VHB LD_426

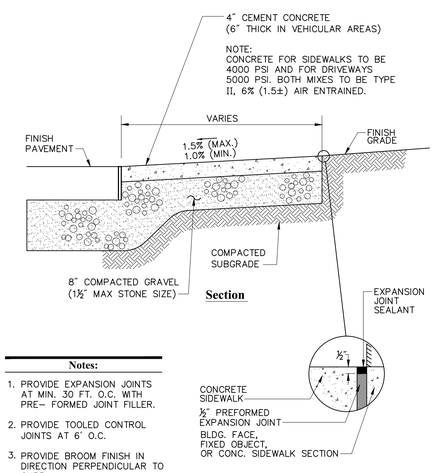

Section

Expansion Joint Detail

Notes:

1. PROVIDE EXPANSION JOINTS AT MIN. 30 FT. O.C. WITH PRE- FORMED JOINT FILLER.
2. PROVIDE TOOLED CONTROL JOINTS AT 6' O.C.
3. PROVIDE BROOM FINISH IN DIRECTION PERPENDICULAR TO CURB.

Concrete Sidewalk

4/11

N.T.S. Source: VHB REV LD_420

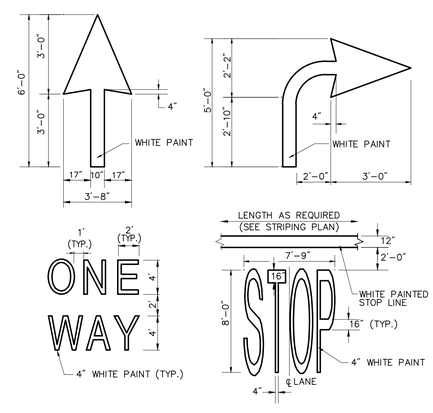

Notes:

1. PAVEMENT MARKINGS TO BE INSTALLED FOR ON SITE WORK IN LOCATIONS SHOWN.

Painted Pavement Markings - On Site

6/08

N.T.S. Source: VHB LD_554

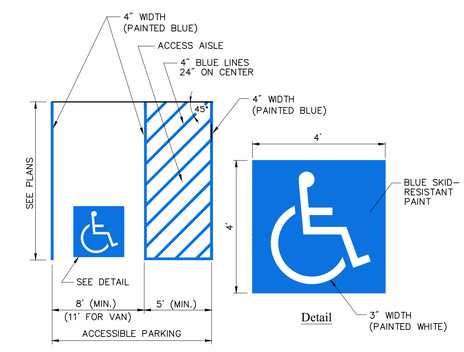

Notes:

1. ALL DIMENSIONS TO EDGES OF 4" PAVEMENT STRIPING.
2. 8' STALL WIDTH REFERS TO 8' CLEAR BETWEEN INSIDE EDGES OF PAVEMENT MARKINGS.
3. ALL SLOPES THROUGHOUT THE ACCESSIBLE PARKING AND AISLE AREAS SHALL NOT EXCEED 1.5%.

Accessible Parking Space

11/10

N.T.S. Source: VHB LD_552

QUINN EVANS ARCHITECTS

2121 WARD PLACE, NW
FOURTH FLOOR
WASHINGTON, DC 20036

v 202 298 6700
f 202 298 6666

WWW.QUINNEVANS.COM

vhb

115 SOUTH 15TH STREET
SUITE 200
RICHMOND, VIRGINIA 23219

804.343.7100 | FAX 804.343.1713

FERRY FARM PHASE 1 IMPROVEMENTS

268 Kings Hwy,
Fredericksburg, VA
22405

QEA # 31402900

Details

SITE PERMIT SUBMISSION
12/19/14

REVISIONS

NO.	DESCRIPTION	DATE

C-601

12/9/2014 5:09:41 PM \\VHB\PROJ\RICHMOND\37512\07 QEA FERRY FARM PHASE I\CADD\PLANSET\37512-07-DT

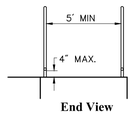

End View

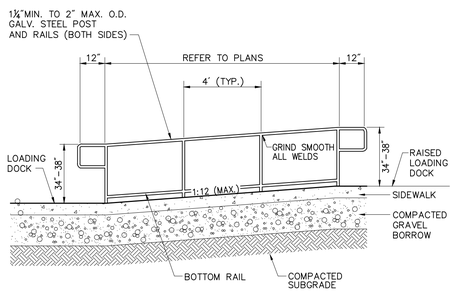

Notes:

1. REFER TO SIDEWALK DETAIL FOR SIDEWALK CONSTRUCTION.
2. REFER TO LOADING DOCK DETAIL FOR LOADING DOCK CONSTRUCTION.

Concrete Ramp with Handrails

7/12

N.T.S. Source: VHB REV LD_764A

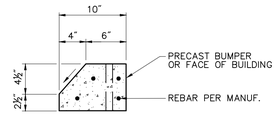

Section

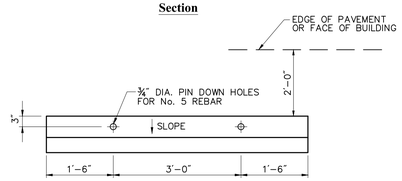

Plan View

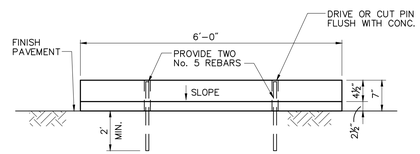

Sloped Side Elevation

Concrete Bumper

6/08

N.T.S. Source: VHB LD_417

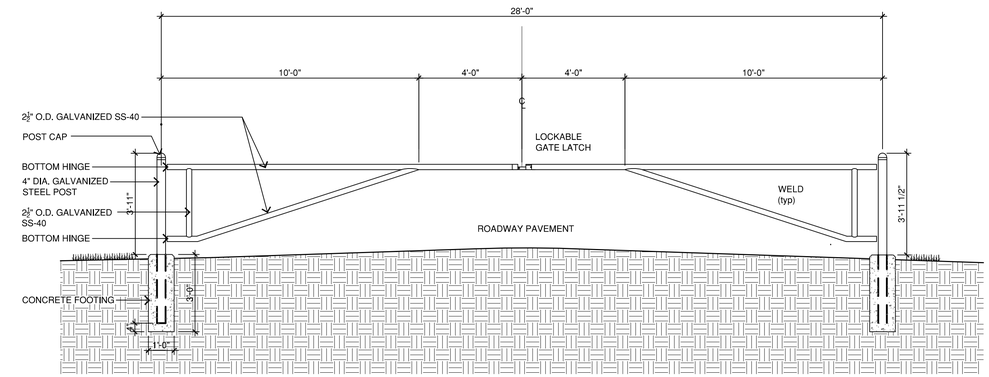

Notes:

1. ALL GATES AND POSTS MILL FINISH, PRIME, PAINT BLACK.
2. ALL METAL PARTS SHALL BE GALVANIZED.

Double Swing Vehicular Gate

N.T.S. Source: VHB

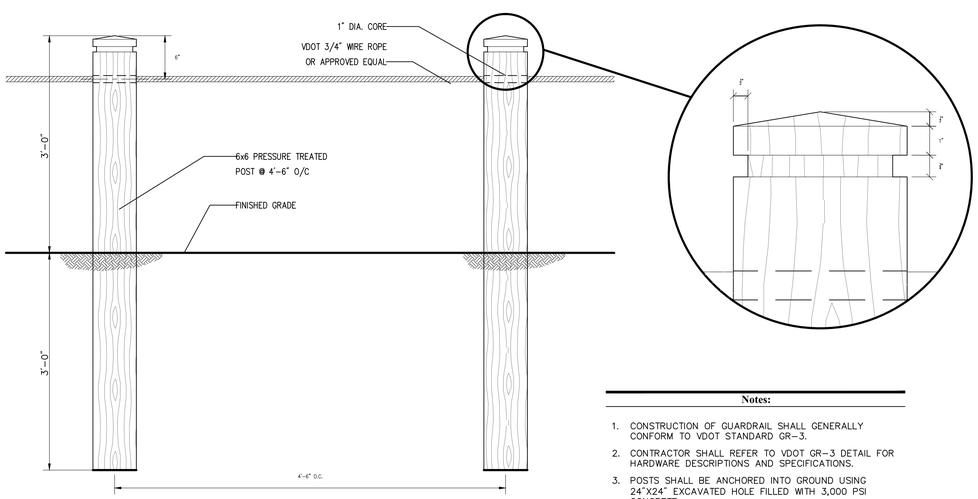

Notes:

1. CONSTRUCTION OF GUARDRAIL SHALL GENERALLY CONFORM TO VDOT STANDARD GR-3.
2. CONTRACTOR SHALL REFER TO VDOT GR-3 DETAIL FOR HARDWARE DESCRIPTIONS AND SPECIFICATIONS.
3. POSTS SHALL BE ANCHORED INTO GROUND USING 24"X24" EXCAVATED HOLE FILLED WITH 3,000 PSI CONCRETE.
4. CONTRACTOR SHALL PROVIDE SUBMITTAL TO ENGINEER FOR APPROVAL.

Wooden Post and Cable Guardrail

N.T.S. Source: VHB

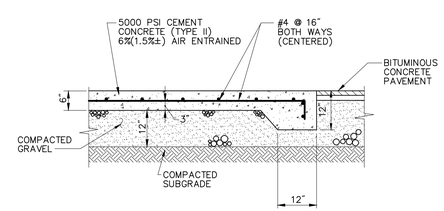

Notes:

1. SIZE OF PAD TO BE AS INDICATED ON PLANS.
2. CONSTRUCTION JOINTS SHALL BE SPACED NO MORE THAN 30 FEET ON CENTER AND SHALL BE EQUALLY SPACED OVER THE LENGTH AND WIDTH OF THE PAD.

Transformer Pad

4/11

N.T.S. Source: VHB REV LD_710

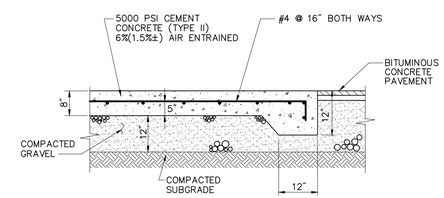

Notes:

1. SIZE OF PAD TO BE AS INDICATED ON PLANS.
2. CONSTRUCTION JOINTS SHALL BE SPACED NO MORE THAN 30 FEET ON CENTER AND SHALL BE EQUALLY SPACED OVER THE LENGTH AND WIDTH OF THE PAD.

Loading Dock Pad

4/11

N.T.S. Source: VHB LD_711

QUINN EVANS ARCHITECTS

2121 WARD PLACE, NW
FOURTH FLOOR
WASHINGTON, DC 20036

v 202 298 6700
f 202 298 6666

WWW.QUINNEVANS.COM

vhb

115 SOUTH 15TH STREET
SUITE 200
RICHMOND, VIRGINIA 23219

804.343.7100 | FAX 804.343.1713

FERRY FARM PHASE 1 IMPROVEMENTS

268 Kings Hwy, Fredericksburg, VA

22405

QEA # 31402900

Details

SITE PERMIT SUBMISSION
12/19/14

REVISIONS

NO.	DESCRIPTION	DATE

C-602

12/19/2014 5:09:41 PM \\VHBPROJ\RICHMOND\37512.07 QEA FERRY FARM PHASE 1\CADD\PLANSET\37512.07-DT

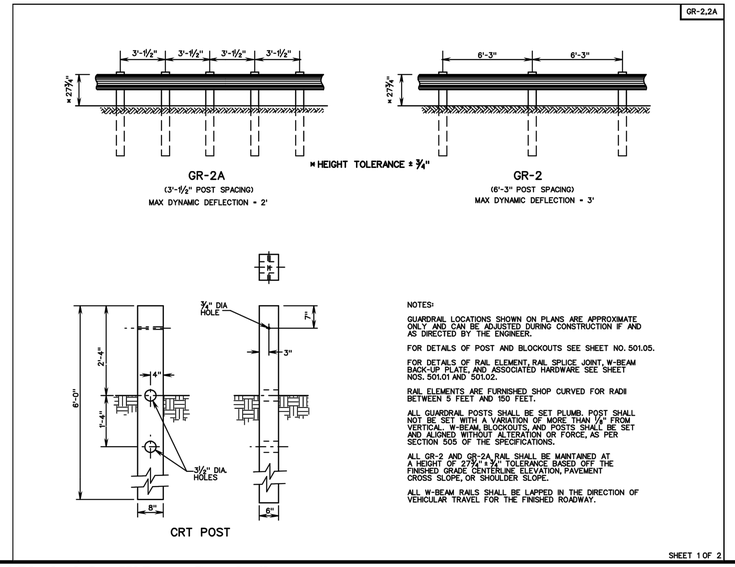

(GR-2) Standard Blocked-Out W Beam Guardrail 07/05

N.T.S. Source: VDOT 501.04

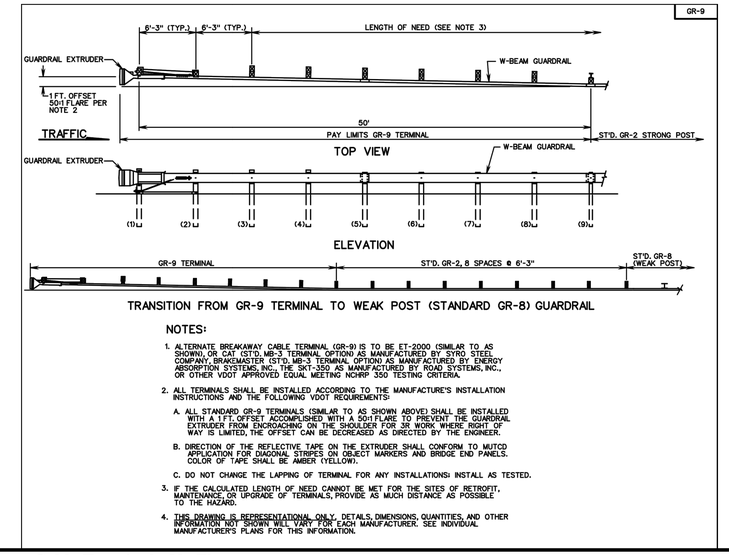

(GR-9) Breakaway Cable Terminal - No Flare 09/06

N.T.S. Source: VDOT 501.18

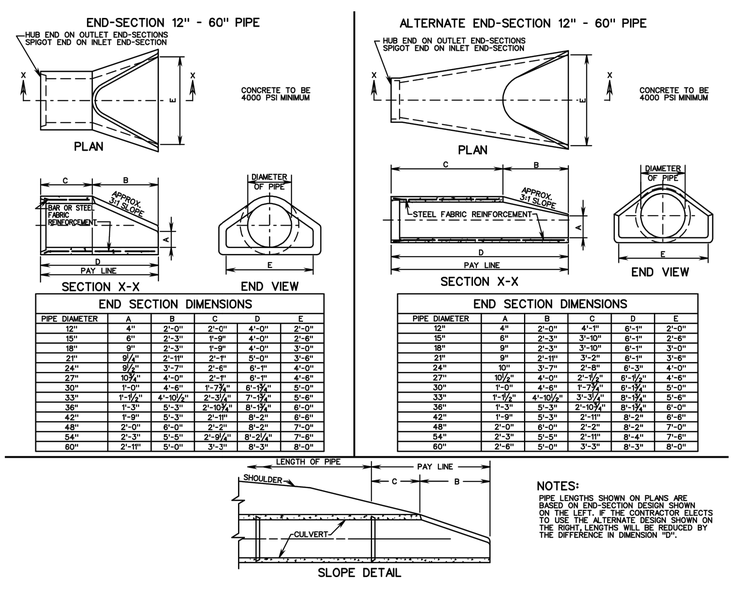

END SECTION DIMENSIONS

PIPE DIAMETER	A	B	C	D	E
12"	4"	2'-0"	2'-0"	4'-0"	2'-0"
15"	6"	2'-3"	1'-9"	4'-0"	2'-6"
18"	9"	2'-3"	1'-9"	4'-0"	3'-0"
21"	9¼"	2'-11"	2'-1"	5'-0"	3'-6"
24"	9¾"	3'-7"	2'-6"	6'-1"	4'-0"
27"	10¾"	4'-0"	2'-7"	6'-1"	4'-6"
30"	1'-0"	4'-6"	1'-7¾"	6'-1¾"	5'-0"
33"	1'-1¾"	4'-10¼"	2'-3¼"	7'-1¾"	5'-6"
36"	1'-3"	5'-3"	2'-10¾"	8'-1¾"	6'-0"
42"	1'-9"	5'-3"	2'-11"	8'-2"	6'-6"
48"	2'-0"	6'-0"	2'-2"	8'-2"	7'-0"
54"	2'-3"	5'-5"	2'-9¼"	8'-2¼"	7'-6"
60"	2'-11"	5'-0"	3'-3"	8'-3"	8'-0"

END SECTION DIMENSIONS

PIPE DIAMETER	A	B	C	D	E
12"	4"	2'-0"	4'-1"	6'-1"	2'-0"
15"	6"	2'-3"	3'-10"	6'-1"	2'-6"
18"	9"	2'-3"	3'-10"	6'-1"	3'-0"
21"	9"	2'-11"	3'-2"	6'-1"	3'-6"
24"	10"	3'-7"	2'-8"	6'-3"	4'-0"
27"	10¾"	4'-0"	2'-11¾"	6'-11¾"	4'-6"
30"	1'-0"	4'-6"	1'-7¾"	6'-1¾"	5'-0"
33"	1'-1¾"	4'-10¼"	3'-3¼"	8'-1¾"	5'-6"
36"	1'-3"	5'-3"	2'-10¾"	8'-1¾"	6'-0"
42"	1'-9"	5'-3"	2'-11"	8'-2"	6'-6"
48"	2'-0"	6'-0"	2'-2"	8'-2"	7'-0"
54"	2'-3"	5'-5"	2'-11"	8'-4"	7'-6"
60"	2'-6"	5'-0"	3'-3"	8'-3"	8'-0"

NOTES:
PIPE LENGTHS SHOWN ON PLANS ARE BASED ON END-SECTION DESIGN SHOWN ON THE LEFT. IF THE CONTRACTOR ELECTS TO USE THE ALTERNATE DESIGN SHOWN ON THE RIGHT, LENGTHS WILL BE REDUCED BY THE DIFFERENCE IN DIMENSION "D".

(ES-1) - Flared End Section 12"-60" Concrete Pipe Culverts 12/08

N.T.S. Source: VDOT 102.01

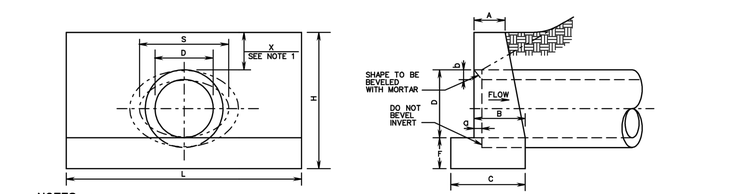

NOTES:
1. "H" MAY BE REDUCED UNTIL "X" REACHES A MINIMUM OF 4" WHERE ENDWALL WOULD PROTRUDE ABOVE SHOULDER LINE. IN NO CASE SHALL TOP OF ENDWALL PROJECT ABOVE FILL SLOPE, DITCH SLOPE, OR SHOULDER.
2. THIS ITEM MAY BE PRECAST OR CAST IN PLACE.
3. ALL CAST IN PLACE CONCRETE TO BE CLASS A3. FOR PRECAST SEE SHEET 101.02.
4. THIS STANDARD TO BE USED WITH STRAIGHT CROSSINGS AND ALL SKEWS(0° TO 45°).
5. HEADWALL TO BE BEVELED IN ALL AREAS EXCEPT WHERE A CONFLICT WITH INVERT OR WINGWALLS OCCUR
6. BEVEL EDGE IS REQUIRED ON THE HEADWALL AT THE INLET END OF THE CULVERT (WHERE THE FLOW ENTERS THE CULVERT).
7. HEADWALL AT THE OUTLET END OF THE CULVERT MAY BE EITHER SQUARE EDGE OR BEVEL EDGE.
8. ON SHALLOW FILLS, WHERE ENDWALLS ARE 1' OR LESS BELOW SHOULDER LINE, THE TOP OF THE ENDWALL SHALL BE CONSTRUCTED PARALLEL TO THE GRADE OF THE ROAD.
9. ¾" CHAMFER MAY BE PROVIDED ON ALL EDGES AT MANUFACTURER'S OPTION.

EW-1

ENDWALL FOR CIRCULAR PIPE

	DIAMETER OF PIPE CULVERT					
	12"	15"	18"	21" OR 24"	27" OR 30"	33" OR 36"
A	0'-6"	0'-8"	0'-9"	0'-11"	1'-0"	1'-0"
B	0'-11"	1'-1"	1'-3"	1'-6"	1'-9"	2'-0"
C	1'-4"	1'-7"	1'-9"	2'-2"	2'-6"	2'-9"
D	1'-0"	1'-3"	1'-6"	2'-0"	2'-6"	3'-0"
F	0'-6"	0'-8"	0'-8"	0'-9"	0'-9"	0'-9"
H	2'-3"	2'-11"	3'-2"	3'-9"	4'-3"	4'-9"
L	4'-0"	5'-0"	6'-0"	8'-0"	10'-0"	12'-0"
a	0'-1¼"	0'-1¾"	0'-2"	0'-2½"	0'-3¼"	0'-3¾"
b	0'-1"	0'-1¼"	0'-1½"	0'-2"	0'-2½"	0'-3"
CUBIC YARDS OF CONCRETE						
CONC. PIPE	0.241	0.492	0.697	1.319	2.067	2.947
C.M. PIPE	0.257	0.521	0.739	1.398	2.198	3.145

EW-1A

ENDWALL FOR ELLIPTICAL PIPE

	SIZE OF ELLIPTICAL PIPE CULVERT (SPAN x RISE)							
	23"x14"	30"x19"	34"x22"	38"x24"	42"x27"	45"x29"	49"x32"	53"x34"
A	0'-8"	0'-9"	0'-10"	0'-11"	0'-11"	1'-0"	1'-0"	1'-0"
B	1'-2"	1'-5"	1'-6"	1'-8"	1'-9"	1'-10"	1'-11"	1'-11"
C	1'-8"	1'-11"	2'-1"	2'-4"	2'-5"	2'-7"	2'-8"	2'-9"
D	1'-2"	1'-7"	1'-10"	2'-0"	2'-3"	2'-5"	2'-8"	2'-10"
F	0'-8"	0'-8"	0'-9"	0'-9"	0'-9"	0'-9"	0'-9"	0'-9"
H	2'-10"	3'-3"	3'-7"	3'-9"	4'-0"	4'-2"	4'-5"	4'-7"
L	5'-5"	7'-2"	8'-6"	9'-2"	10'-2"	10'-11"	12'-1"	12'-11"
S	1'-11"	2'-6"	2'-10"	3'-2"	3'-6"	3'-9"	4'-1"	4'-5"
a	0'-2½"	0'-3¼"	0'-3½"	0'-4"	0'-4½"	0'-4¾"	0'-5"	0'-5½"
b	0'-2"	0'-2½"	0'-2¾"	0'-3"	0'-3½"	0'-3¾"	0'-4"	0'-4½"
CUBIC YARDS OF CONCRETE								
CONC.PIPE	0.502	0.855	1.236	1.500	1.811	2.101	2.512	2.801

(EW-1) - Standard Endwall for Pipe Culverts 12"-36" Circular and 23"x14"-53"x34" Elliptical Pipes 12/08

N.T.S. Source: VDOT 101.01

QUINN EVANS ARCHITECTS
2121 WARD PLACE, NW
FOURTH FLOOR
WASHINGTON, DC 20036
v 202 298 6700
f 202 298 6666
WWW.QUINNEVANS.COM

vhb
115 SOUTH 15TH STREET
SUITE 200
RICHMOND, VIRGINIA 23219
804.343.7100 | FAX 804.343.1713

FERRY FARM PHASE 1 IMPROVEMENTS

268 Kings Hwy, Fredericksburg, VA 22405

QEA # 31402900

Details

COMMONWEALTH OF VIRGINIA
JOHN P. CARTY
Lic. No. 039452
12/19/14
PROFESSIONAL ENGINEER

SITE PERMIT SUBMISSION
12/19/14

REVISIONS

NO.	DESCRIPTION	DATE

C-603

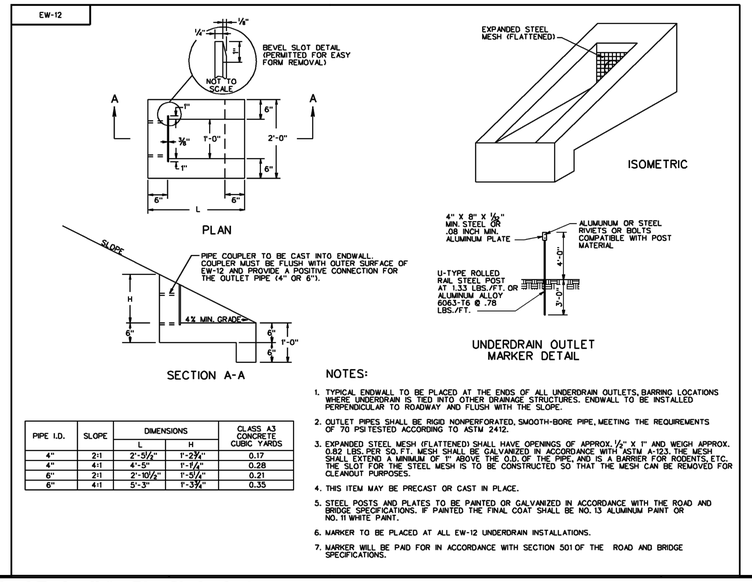

PIPE I.D.	SLOPE	DIMENSIONS		CLASS A3 CONCRETE CUBIC YARDS
		L	H	
4"	2:1	2'-5½"	1'-2¾"	0.17
4"	4:1	4'-5"	1'-1¼"	0.28
6"	2:1	2'-10½"	1'-5½"	0.21
6"	4:1	5'-3"	1'-3¾"	0.35

NOTES:

1. TYPICAL ENDWALL TO BE PLACED AT THE ENDS OF ALL UNDERDRAIN OUTLETS, BARRING LOCATIONS WHERE UNDERDRAIN IS TIED INTO OTHER DRAINAGE STRUCTURES. ENDWALL TO BE INSTALLED PERPENDICULAR TO ROADWAY AND FLUSH WITH THE SLOPE.
2. OUTLET PIPES SHALL BE RIGID NONPERFORATED, SMOOTH-BORE PIPE, MEETING THE REQUIREMENTS OF 70 PSI TESTED ACCORDING TO ASTM 2412.
3. EXPANDED STEEL MESH (FLATTENED) SHALL HAVE OPENINGS OF APPROX. ½" X 1" AND WEIGH APPROX. 0.82 LBS./PER SQ. FT. MESH SHALL BE GALVANIZED IN ACCORDANCE WITH ASTM A-123. THE MESH SHALL EXTEND A MINIMUM OF 1" ABOVE THE O.D. OF THE PIPE, AND IS A BARRIER FOR RODENTS, ETC. THE SLOT FOR THE STEEL MESH IS TO BE CONSTRUCTED SO THAT THE MESH CAN BE REMOVED FOR CLEANOUT PURPOSES.
4. THIS ITEM MAY BE PRECAST OR CAST IN PLACE.
5. STEEL POSTS AND PLATES TO BE PAINTED OR GALVANIZED IN ACCORDANCE WITH THE ROAD AND BRIDGE SPECIFICATIONS. IF PAINTED THE FINAL COAT SHALL BE NO. 13 ALUMINUM PAINT OR NO. 11 WHITE PAINT.
6. MARKER TO BE PLACED AT ALL EW-12 UNDERDRAIN INSTALLATIONS.
7. MARKER WILL BE PAID FOR IN ACCORDANCE WITH SECTION 501 OF THE ROAD AND BRIDGE SPECIFICATIONS.

(EW-12) Standard Endwall for Pipe Underdrain 4/09

N.T.S. Source: VDOT 101.32

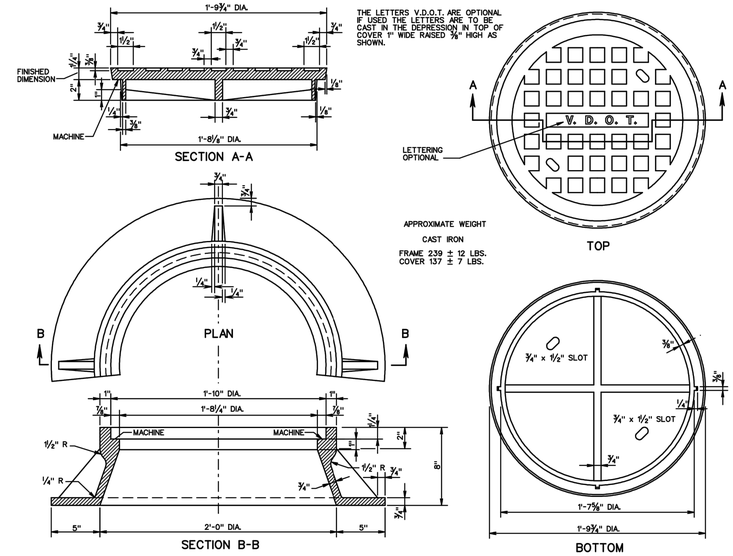

(MH-1) - Standard Manhole Frame and Cover 12/08

N.T.S. Source: VDOT 106.02

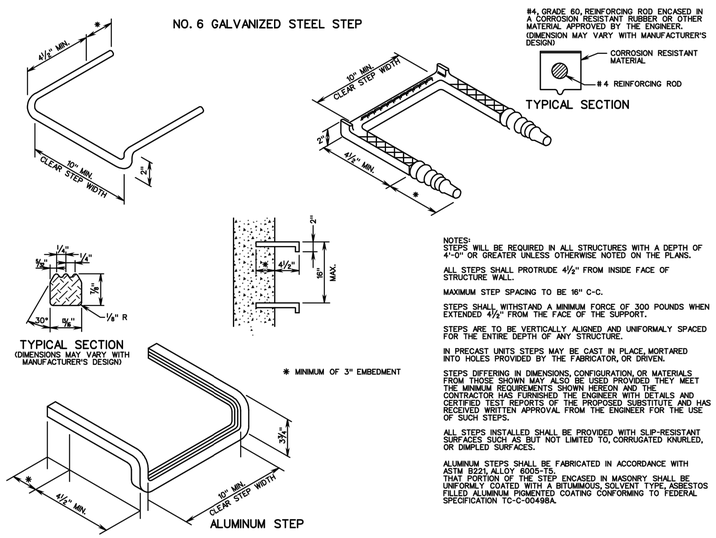

NOTES:
STEPS WILL BE REQUIRED IN ALL STRUCTURES WITH A DEPTH OF 4'-0" OR GREATER UNLESS OTHERWISE NOTED ON THE PLANS.

ALL STEPS SHALL PROTRUDE 4½" FROM INSIDE FACE OF STRUCTURE WALL.

MAXIMUM STEP SPACING TO BE 16" C-C.

STEPS SHALL WITHSTAND A MINIMUM FORCE OF 300 POUNDS WHEN EXTENDED 4½" FROM THE FACE OF THE SUPPORT.

STEPS ARE TO BE VERTICALLY ALIGNED AND UNIFORMALY SPACED FOR THE ENTIRE DEPTH OF ANY STRUCTURE.

IN PRECAST UNITS STEPS MAY BE CAST IN PLACE, MORTARED INTO HOLES PROVIDED BY THE FABRICATOR, OR DRIVEN.

STEPS DIFFERING IN DIMENSIONS, CONFIGURATION, OR MATERIALS FROM THOSE SHOWN MAY ALSO BE USED PROVIDED THEY MEET THE MINIMUM REQUIREMENTS SHOWN HEREON AND THE CONTRACTOR HAS FURNISHED THE ENGINEER WITH DETAILS AND CERTIFIED TEST REPORTS OF THE PROPOSED SUBSTITUTE AND HAS RECEIVED WRITTEN APPROVAL FROM THE ENGINEER FOR THE USE OF SUCH STEPS.

ALL STEPS INSTALLED SHALL BE PROVIDED WITH SLIP-RESISTANT SURFACES SUCH AS BUT NOT LIMITED TO, CORRUGATED KNURLED, OR DIMPLED SURFACES.

ALUMINUM STEPS SHALL BE FABRICATED IN ACCORDANCE WITH ASTM B221, ALLOY 6005-T5.
THAT PORTION OF THE STEP ENCASED IN MASONRY SHALL BE UNIFORMLY COATED WITH A BITUMMOUS, SOLVENT TYPE, ASBESTOS FILLED ALUMINUM PIGMENTED COATING CONFORMING TO FEDERAL SPECIFICATION TC-C-004988A.

(ST-1) - Standard Step 12/08

N.T.S. Source: VDOT 106.09

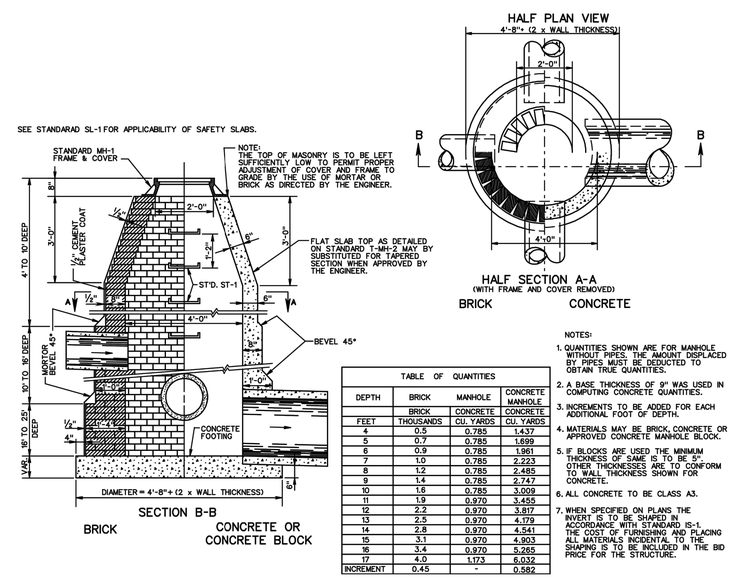

TABLE OF QUANTITIES			
DEPTH	BRICK	MANHOLE	CONCRETE MANHOLE
	BRICK	CONCRETE	CONCRETE
FEET	THOUSANDS	CU. YARDS	CU. YARDS
4	0.5	0.785	1.437
5	0.7	0.785	1.699
6	0.9	0.785	1.961
7	1.0	0.785	2.223
8	1.2	0.785	2.485
9	1.4	0.785	2.747
10	1.6	0.785	3.009
11	1.9	0.970	3.455
12	2.2	0.970	3.817
13	2.5	0.970	4.179
14	2.8	0.970	4.541
15	3.1	0.970	4.903
16	3.4	0.970	5.265
17	4.0	1.173	6.032
INCREMENT	0.45	-	0.582

NOTES:

1. QUANTITIES SHOWN ARE FOR MANHOLE WITHOUT PIPES. THE AMOUNT DISPLACED BY PIPES MUST BE DEDUCTED TO OBTAIN TRUE QUANTITIES.
2. A BASE THICKNESS OF 9" WAS USED IN COMPUTING CONCRETE QUANTITIES.
3. INCREMENTS TO BE ADDED FOR EACH ADDITIONAL FOOT OF DEPTH.
4. MATERIALS MAY BE BRICK, CONCRETE OR APPROVED CONCRETE MANHOLE BLOCK.
5. IF BLOCKS ARE USED THE MINIMUM THICKNESS OF SAME IS TO BE 5", OTHER THICKNESSES ARE TO CONFORM TO WALL THICKNESS SHOWN FOR CONCRETE.
6. ALL CONCRETE TO BE CLASS A3.
7. WHEN SPECIFIED ON PLANS THE INVERT IS TO BE SHAPED IN ACCORDANCE WITH STANDARD IS-1. THE COST OF FURNISHING AND PLACING ALL MATERIALS INCIDENTAL TO THE SHAPING IS TO BE INCLUDED IN THE BID PRICE FOR THE STRUCTURE.

(MH-1) - Manhole for 12"-48" Pipe Culverts 12/08

N.T.S. Source: VDOT 106.01

QUINN EVANS ARCHITECTS
2121 WARD PLACE, NW
FOURTH FLOOR
WASHINGTON, DC 20036
v 202 298 6700
f 202 298 6666
WWW.QUINNEVANS.COM

vhb
115 SOUTH 15TH STREET
SUITE 200
RICHMOND, VIRGINIA 23219
804.343.7100 | FAX 804.343.1713

FERRY FARM PHASE 1 IMPROVEMENTS

268 Kings Hwy,
Fredericksburg, VA
22405

QEA # 31402900

Details

COMMONWEALTH OF VIRGINIA
JOHN P. CARTY
Lic. No. 039452
12/19/14
PROFESSIONAL ENGINEER

SITE PERMIT SUBMISSION
12/19/14

REVISIONS

NO.	DESCRIPTION	DATE

C-604

\\VHBPROJ\RICHMOND\37512\07 QEA FERRY FARM PHASE 1\CADD\PLANSET\37512-07-DT
12/19/2014 5:09:41 PM

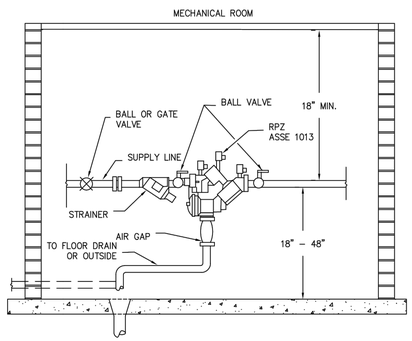

NOTES:
1. ALL PIPING THROUGH CONCRETE TO BE SLEEVED.
2. RPZ DEVICE SHALL BE READILY ACCESSIBLE FOR INSPECTION AND TESTING.
3. NO CONNECTION WILL BE PERMITTED ON SUPPLY LINE BETWEEN METER AND RPZ.
4. INSTALLATION OF RPZ DEVICE IN PIT IS NOT PERMITTED.
5. 2" AND OVER – GATE VALVES MAY BE USED WHERE BALL VALVES INDICATED.
6. 30" OF FREE SPACE IN FRONT OF BACKFLOW.

Interior RPZ Device Installation

12/04

N.T.S. Source: Stafford County DPU 2.2.2–7

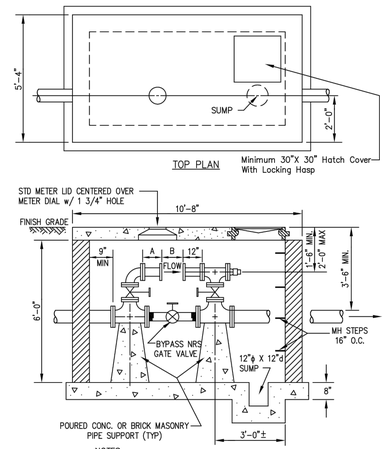

NOTES:
1. DIM. "A" EQUALS 8 TIMES NOMINAL METER SIZE.
2. DIM. "B" TO ACCOMMODATE METER & STRAINER.
3. BYPASS DIAMETER ONE SIZE SMALLER THAN METER.
4. BYPASS OF BRASS OR D.I. PIPE W/MATCHING VALVE.
5. ALL PIPE JOINTS SHALL BE EITHER SCREWED (UNDER 3"ø) OR FLANGED (3"ø AND OVER).
6. SHOP DRAWINGS SHALL BE SUBMITTED TO DEPARTMENT OF UTILITIES FOR APPROVAL.
7. SUMP AREA MUST BE DAY LIGHTED OR FURNISH AND INSTALL A PUMP.
8. WALL PENETRATIONS SHALL BE SEALED WITH MODULAR WALL SEAL.

Water Meter Setting 3" and Larger Meters

12/04

N.T.S. Source: Stafford County DPU 2.2.2–5

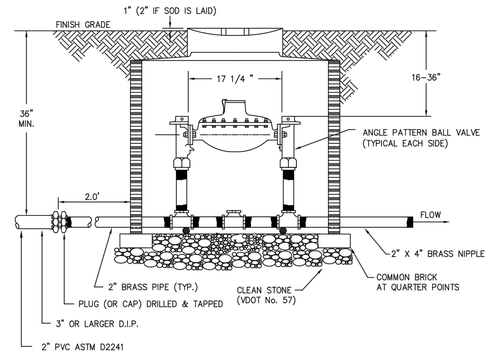

NOTES:
1. ONE PIECE BARREL 36" X 36" HI–DENSITY POLYETHELENE.
2. LID SHALL BE EQUIPPED WITH PENTAGON NUT AND 1 3/4" HOLE.
3. USE SERVICE SADDLE FOR CONNECTION TO MAIN (BOTH PVC AND DIP).
4. GATE VALVE AND VALVE BOX REQUIRED ON 2" AND LARGER SERVICE LINES. USE 2" BRASS NIPPLES BETWEEN SERVICE SADDLE AND GATE VALVE.
5. SCHEDULE 80 PLASTIC PIPE (2) EACH 16" LONG TO BE USED IN BRACE PIPE EYELETS.
6. IF AN APPROVED BACKFLOW DEVICE IS NOT INSTALLED ON THE SERVICE LINE IMMEDIATELY INSIDE THE BUILDING, DOUBLE CHECK VALVES SHALL BE SUBSTITUTED FOR THE ANGLE PATTERN BALL VALVE ON THE DOWNSTREAM SIDE OF THE METER & ADDED TO THE BYPASS.
7. THE GRADE AT THE TOP OF THE BARREL SHALL CONFORM TO THE GENERAL CONTOUR OF FINISH YARD GRADE. NO MOUNDS OR DEPRESSIONS AROUND THE BARREL WILL BE PERMITED.

Water Meter Setting up to and Including 2" Meter

3/06

N.T.S. Source: Stafford County DPU 2.2.2–4

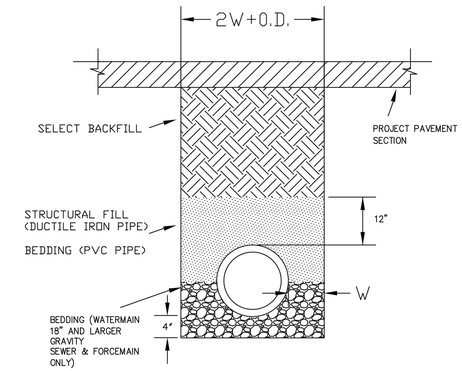

NOTES:
1. SELECT FILL TO BE PLACED IN 6" LAYERS COMPACTED TO 95% DENSITY ABOVE STRUCTURAL BACKFILL OR BEDDING.
2. STRUCTURAL BACKFILL TO EXTEND 12 INCHES OVER CROWN OF DUCTILE IRON PIPE. BEDDING TO EXTEND 12" OVER CROWN OF PVC PIPE.
3. DIMENSION "W" SHALL BE A MINIMUM OF 6 INCHES AND MAXIMUM OF 12 INCHES.
4. BEDDING SHALL BE PLACED FOR A MINIMUM OF 4" BELOW BOTTOM OF PIPE TO THE SPRINGLINE OF THE PIPE.
5. ANY OVEREXCAVATION TO BE BACKFILLED WITH BEDDING MATERIAL.

Trench Beneath Proposed New Pavement

3/06

N.T.S. Source: Stafford County DPU 1.5.2–3

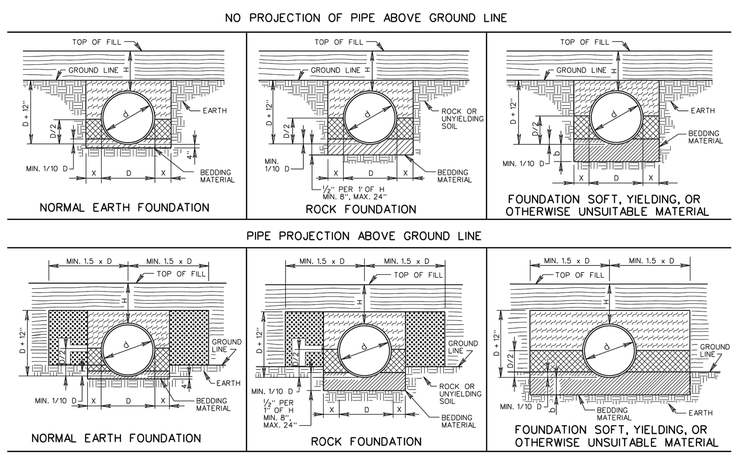

NOTES:

FOR GENERAL NOTES ON PIPE BEDDING, SEE INSTALLATION OF PIPE CULVERTS AND STORM SEWERS GENERAL NOTES ON SHEET 107.00.

CRUSHED GLASS CONFORMING TO THE SIZE REQUIREMENTS FOR CRUSHER RUN AGGREGATE SIZE 25 AND 26 MAY BE USED IN PLACE OF CLASS I BACKFILL.

(PB-1) - Installation of Pipe Culverts and Storm Sewers Circular Pipe Bedding and Backfill - Method "A"

7/12

N.T.S. Source: VDOT 107.01

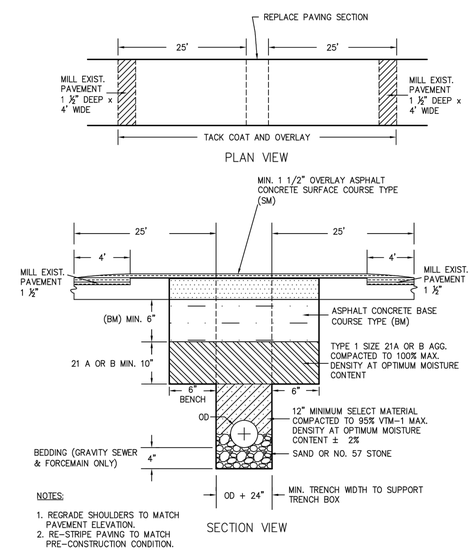

NOTES:
1. REGRADE SHOULDERS TO MATCH PAVEMENT ELEVATION.
2. RE–STRIPE PAVING TO MATCH PRE–CONSTRUCTION CONDITION.

* FOR PIPE LESS THAN 12" THE TRENCH WIDTH MAY BE 36" MAXIMUM SEE UB–1 (VDOT ROAD AND BRIDGE STANDARDS VOLUME II)

Water & Sewer Trench Detail for Existing Roadways

12/04

N.T.S. Source: Stafford County DPU 1.5.2–4

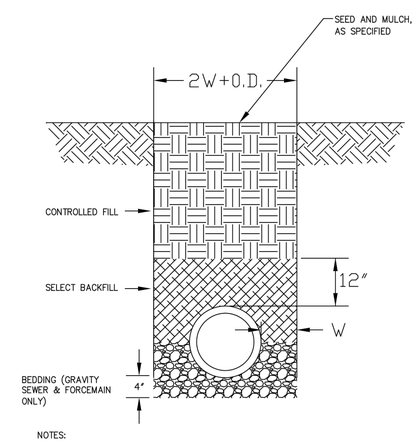

NOTES:
1. CONTROLLED FILL TO BE PLACED ABOVE SELECT FILL.
2. SELECT BACKFILL TO EXTEND 12 INCHES OVER CROWN OF PIPE.
3. DIMENSION "W" SHALL BE A MINIMUM OF 6 INCHES AND MAXIMUM OF 12 INCHES.
4. BEDDING SHALL BE PLACED FOR A MINIMUM OF 4" BELOW BOTTOM OF PIPE TO THE SPRINGLINE OF THE PIPE.

Non-Paved Trench Detail

3/06

N.T.S. Source: Stafford County DPU 1.5.2–2

QUINN EVANS ARCHITECTS

2121 WARD PLACE, NW
FOURTH FLOOR
WASHINGTON, DC 20036

v 202 298 6700
f 202 298 6666

WWW.QUINNEVANS.COM

vhb

115 SOUTH 15TH STREET
SUITE 200
RICHMOND, VIRGINIA 23219

804.343.7100 | FAX 804.343.1713

FERRY FARM PHASE 1 IMPROVEMENTS

268 Kings Hwy, Fredericksburg, VA

22405

QEA # 31402900

Details

COMMONWEALTH OF VIRGINIA
JOHN P. CARTY
Lic. No. 039452
12/19/14
PROFESSIONAL ENGINEER

SITE PERMIT SUBMISSION
12/19/14

REVISIONS

NO.	DESCRIPTION	DATE

C-605

12/9/2014 5:09:41 PM \\VHB\PROJ\RICHMOND\37512.07 QEA FERRY FARM PHASE I\CADD\PLANSET\37512.07-DT

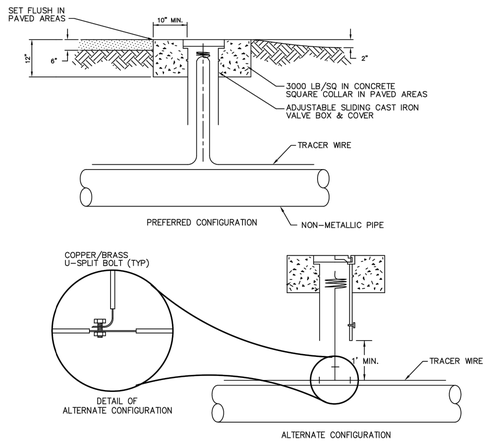

NOTES:
1. MAXIMUM TRACER WIRE BOX SPACING, 300 FEET.
2. TRACER WIRE, 10 GAUGE SOLID COPPER, PVC INSULATED.
3. COAT WITH LIQUID ELECTRICAL-GRADE MOISTURE AND CORROSION INHIBITOR, THEN WRAP TRACER WIRE SPLICES WITH ELECTRICAL TAPE.
4. PROVIDE SUFFICIENT TRACER WIRE TO EXTEND 3 FEET BEYOND THE VALVE BOX COVER. ROLL UP WIRE AND PLACE UNDER COVER.
5. ATTACH TRACER WIRE TO PIPE EVERY 10 FEET WITH DUCT TAPE.
6. COUNTY MAY TEST TRACER WIRE FOR CONTINUITY PRIOR TO ACCEPTANCE.

Tracer Wire Locator Box

12/04

N.T.S. Source: Stafford County DPU 2.4.5-2

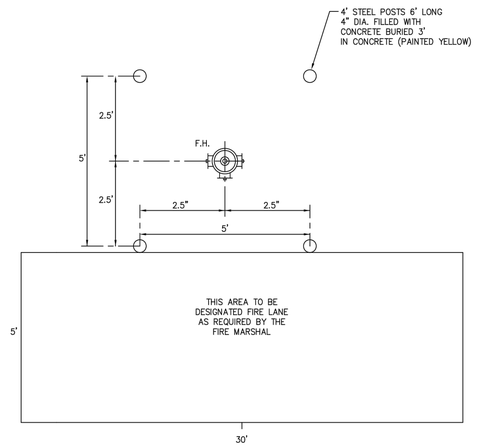

Typical Fire Hydrant Post Protection

12/04

N.T.S. Source: Stafford County DPU 2.4.4-7

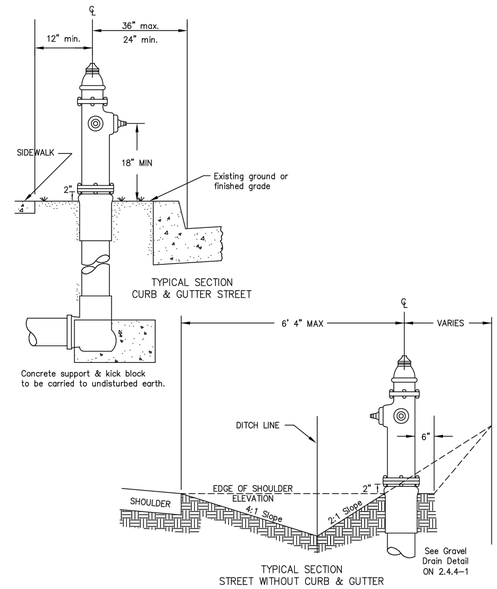

Typical Fire Hydrant Location

12/04

N.T.S. Source: Stafford County DPU 2.4.4-2

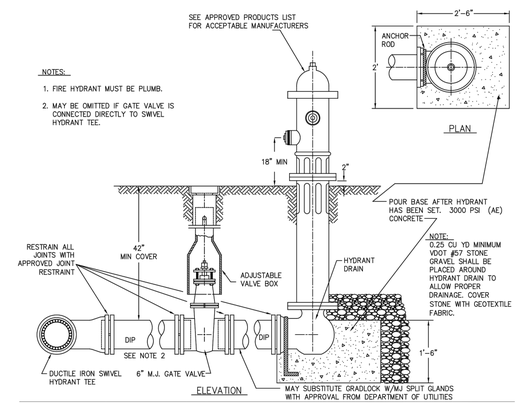

Typical Fire Hydrant Assembly

12/04

N.T.S. Source: Stafford County DPU 2.4.4-1

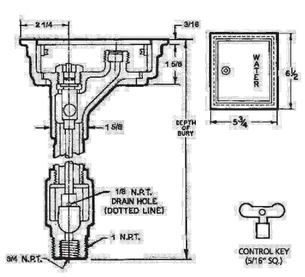

In-Ground Hose Bib

N.T.S. Source: Josam 71600

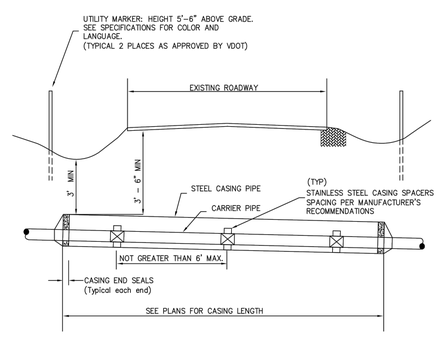

RESTRAIN ALL JOINTS INSIDE CASING. PUSH OR PULL THE CARRIER PIPE THROUGH THE CASING SO THAT THE CARRIER PIPE JOINTS ARE ALWAYS COMPRESSED.

Carrier Pipe	CASING PIPE Minimum Casing Pipe O. D.	Minimum Casing Thickness * Cover to 15'	Cover 15' & over
4	14	1/4"	5/16"
6	16	1/4"	5/16"
8	18	1/4"	5/16"
10	18	1/4"	5/16"
12	24	1/4"	5/16"
14	24	1/4"	5/16"
16	30	1/4"	5/16"
18	30	3/8"	3/8"
20	30	3/8"	3/8"
24	36	3/8"	3/8"
30	42	7/16"	7/16"
36	48	7/16"	7/16"
42	54	7/16"	7/16"
48	60	7/16"	7/16"

*NOTE: or as required by VDOT

POSITIONING

STANDARD: Carrier lays on casing bottom. Top runners maintain spacing in event of rollover.

Steel Casing for PVC or DIP

03/06

N.T.S. Source: Stafford County DPU 1.4.2-2A

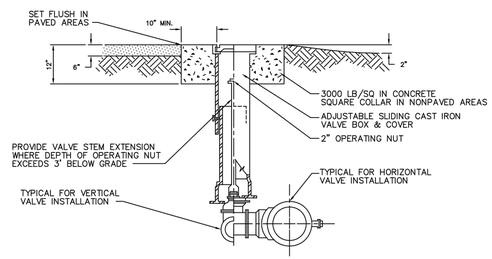

Typical Valve and Valve Box

12/04

N.T.S. Source: Stafford County DPU 2.4.5-1

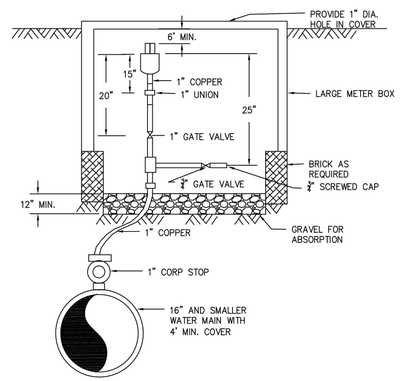

NOTES:
A. ALL COPPER FITTINGS WILL BE COMPRESSION TYPE.
B. SADDLE MUST BE USED IF TAP IS MADE IN PVC MAIN.

1" Air Release Valve

12/04

N.T.S. Source: Stafford County DPU 2.3.1-1

QUINN EVANS ARCHITECTS

2121 WARD PLACE, NW
FOURTH FLOOR
WASHINGTON, DC 20036

v 202 298 6700
f 202 298 6666

WWW.QUINNEVANS.COM

vhb

115 SOUTH 15TH STREET
SUITE 200
RICHMOND, VIRGINIA 23219

804.343.7100 | FAX 804.343.1713

FERRY FARM PHASE 1 IMPROVEMENTS

268 Kings Hwy,
Fredericksburg, VA
22405

QEA # 31402900

Details

SITE PERMIT SUBMISSION
12/19/14

REVISIONS

NO.	DESCRIPTION	DATE

C-606

12/9/2014 5:09:41 PM \\VHB\PROJ\RICHMOND\37912.07 QEA FERRY FARM PHASE 1\CADD\PLANSET\37912.07-DT

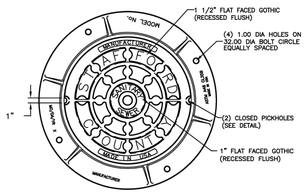

PLAN VIEW TOP

PLAN VIEW
BOTTOM OF COVER

WEIGHT: FRAME, 180 LBS
COVER, 135 LBS
TOTAL, 315 LBS

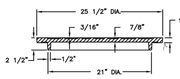

SECTION OF COVER

PICKHOLE DETAIL

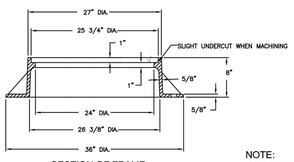

SECTION OF FRAME

√ MACHINED SURFACE

NOTE:
FOR REQUIREMENTS ON SECURING FRAME TO CONE, SEE DETAIL 3.2.1-4

Standard Manhole Frame & Cover

3/06

N.T.S. Source: Stafford County DPU 3.2.3–1

SECTION A–A

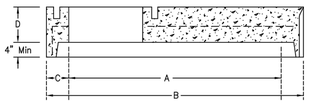

NOTES:

1. Concrete To Be 4000 PSI Compressive Strength, Min.
2. All Reinforcing Steel To Meet Current Requirements Of ASTM Spec. A–615.
3. Manhole Sections To Meet Current Requirements Of ASTM Spec. C–478.
4. Flat Top Shall Be Used Only When Specifically Required By The Plans Or Where There Is Height Or Invert Conflict As Determined By The Contractor And Approved By The County.
5. Joint Configuration May Be Cast Bell–Up Or Spigot–Up.
6. See Note 5, Sec. 3.2.1–1.

MANHOLE SIZE

	4'	5'	6'
A	48"	60"	72"
B	58"	72"	86"
C	5"	6"	7"
D	6"	8"	8"

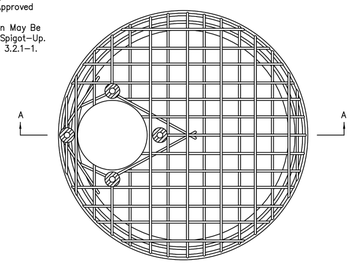

TOP VIEW

Precast Concrete Manhole Flat Top

12/04

N.T.S. Source: Stafford County DPU 3.2.1–3

NOTES:

1. MANHOLE TO MEET CURRENT REQUIREMENTS OF ASTM SPEC. C–478.
2. ALL REINFORCING STEEL TO MEET CURRENT REQUIREMENTS OF ASTM SPEC. A–615.
3. CONCRETE TO BE 4000 PSI MINIMUM COMPRESSIVE STRENGTH.
4. TAPERED JOINT WITH FORSHEDA GASKET TO MEET CURRENT REQUIREMENTS OF ASTM SPEC. C–361 & C–443.
5. BUTYL MASTIC OR APPROVED EQUAL SHALL BE USED IN ADDITION TO THE GASKET SPECIFIED.
6. APPROVED FLEXIBLE JOINT REQUIRED ON ALL PIPE CONNECTIONS TO MANHOLES. INSTALLATION SHALL BE IN ACCORDANCE WITH MANUFACTURER'S INSTRUCTIONS.
7. THE EXTERIOR OF ALL MANHOLES SHALL BE COATED WITH BITUMINOUS MATERIAL APPLIED WITH TWO COAT APPLICATION WITH MIMIMUM 16 DRY MILLS.
8. MANUFACTURER'S NAME TO BE ON THE INSIDE OF CONE.
9. STEPS SHALL NOT BE INSTALLED IN MANHOLES REQUIRING HDPE LINING.
10. INVERTS FOR MANHOLES WITH CHANGE OF DIRECTION >45 DEGREES SHALL BE FULL DEPTH.
11. HDPE LINING SHALL BE INSTALLED WHERE REQUIRED.

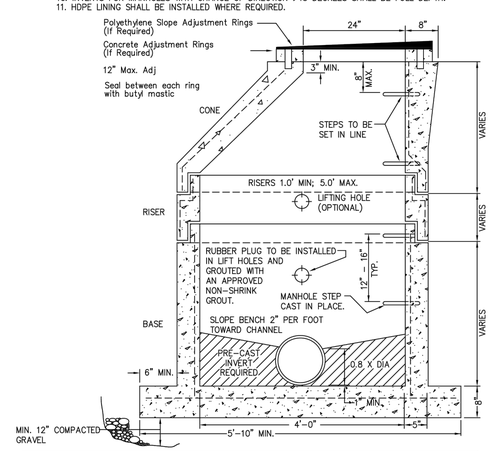

Standard 4' I.D. Precast Concrete Manhole

12/04

N.T.S. Source: Stafford County DPU 3.2.1–1

NOTES:

1. Concrete To Be 4000 PSI Compressive Strength, Minimum.
2. Pipe Connections To Manholes To Be Approved Flexible Sleeves. (See Note 6, 3.2.1–1)
3. All Reinforcing To Meet Current Requirements Of ASTM Spec. A–615.
4. Manufacturer's Name To Be On Inside Face Of Cone.
5. Manhole To Meet Current Requirements Of ASTM Spec. C–478.
6. Min. 12" Compacted Gravel Under Base Sections.
7. Joint Configuration May Be Cast Bell–Up Or Spigot–Up.
8. See Note 5, 3.2.1–1
9. See Note 7, 3.2.1–1
10. See Note 9, 3.2.1–1
11. Inverts For Manholes With Change Of Direction >45 Shall Be Full Depth.
12. Pre–Cast Inverts Are Not Required For Manhole Diameters >5'.
13. HDPE Lining Shall Be Installed Where Required.

		Manhole Diameter In Feet		
		5'	6'	8'
Dimensions	A	60"	72"	96"
	B	84"	98"	113"
	C	6"	7"	9"
	D	8"		
	E	Varies		
	F	13"min.		
	G	Varies		
	H	6"	6"	8"

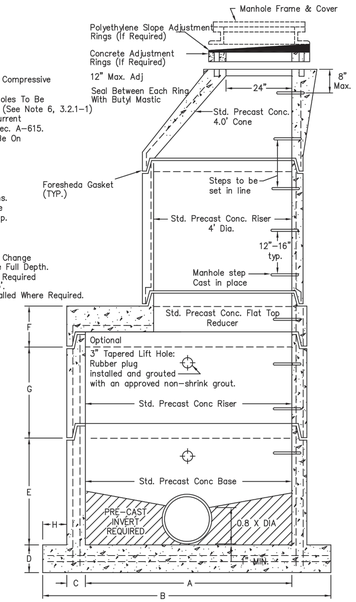

Typical 5', 6', 8' I.D. Precast Concrete Manhole w/4' Stack

3/06

N.T.S. Source: Stafford County DPU 3.2.1–2

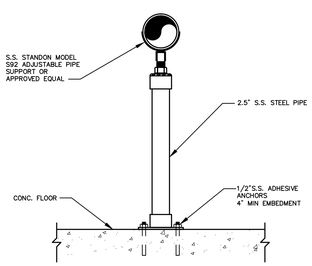

Adjustable Pipe Support Detail

06/11

N.T.S.

FORCE MAIN DIAMETER	GRAVITY SEWER DIAMETER
1 1/2"–3"	6"
4"	8"
6"	8"
8"	10"
10"	12"
12"	15"

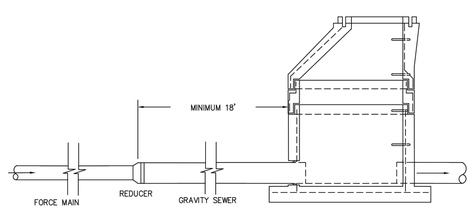

Force Main Connection to Gravity Sewer

12/04

N.T.S. Source: Stafford County DPU 4.4.1–1

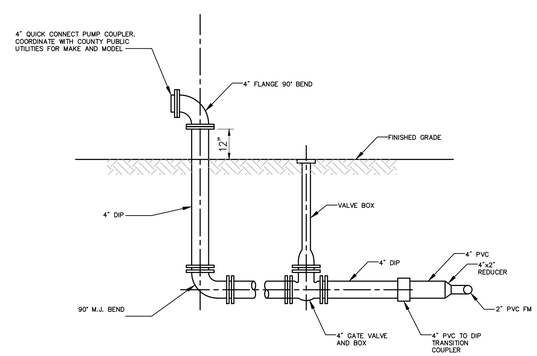

Emergency Pump Connection (Discharge)

N.T.S.

ANCHOR BOLT DETAIL

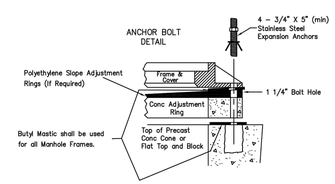

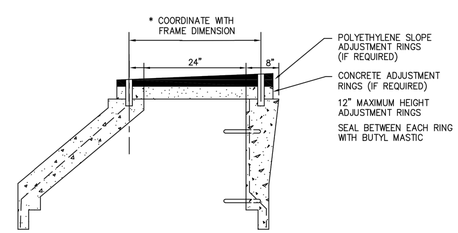

NOTE:
1. STAINLESS STEEL ALL–THREAD ROD WITH EPOXY GROUT CAPSULES MAY BE USED IN LIEU OF EXPANSION ANCHORS WITH APPROVAL OF COUNTY.

Manhole Anchor Bolt

12/04

N.T.S. Source: Stafford County DPU 3.2.1–4

QUINN EVANS ARCHITECTS

2121 WARD PLACE, NW
FOURTH FLOOR
WASHINGTON, DC 20036

v 202 298 6700
f 202 298 6666

WWW.QUINNEVANS.COM

vhb

115 SOUTH 15TH STREET
SUITE 200
RICHMOND, VIRGINIA 23219

804.343.7100 | FAX 804.343.1713

FERRY FARM PHASE 1 IMPROVEMENTS

268 Kings Hwy,
Fredericksburg, VA
22405

QEA # 31402900

Details

SITE PERMIT SUBMISSION
12/19/14

REVISIONS

NO.	DESCRIPTION	DATE

C-607

12/9/2014 5:09:41 PM \\VHB\PROJ\RICHMOND\37912.07 QEA FERRY FARM PHASE I\CAD\LDP\ANSE1\37912.07-DT

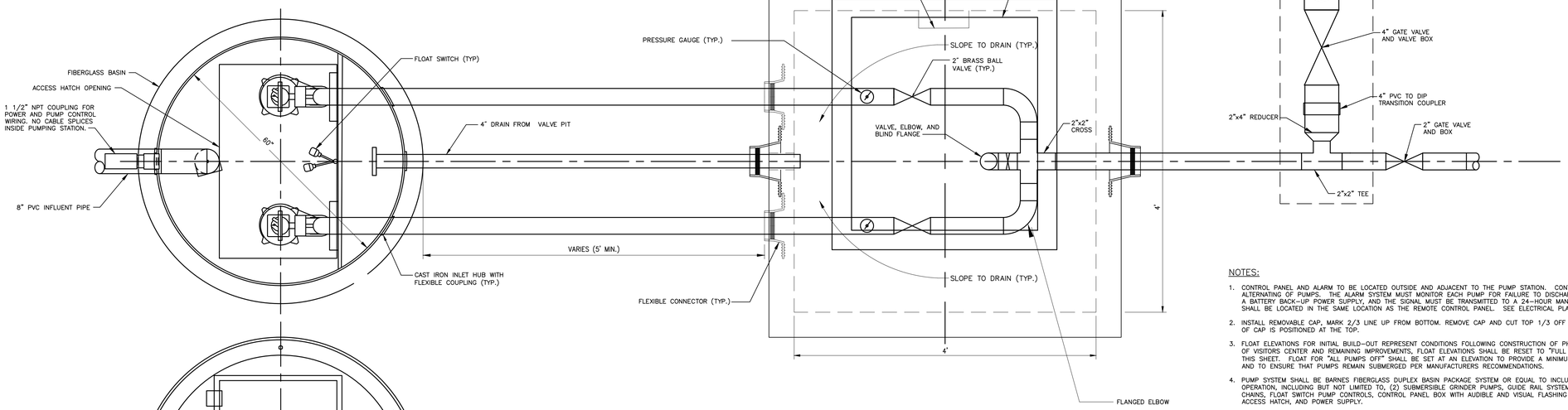

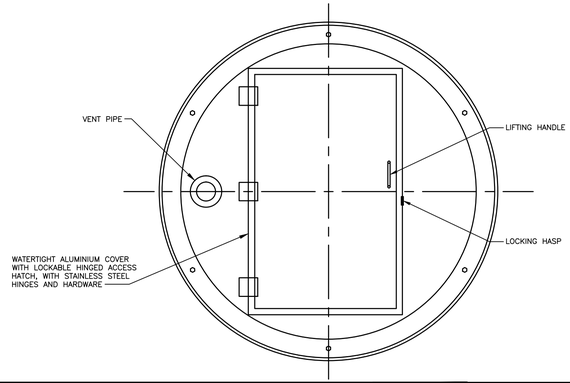

NOTES:

1. ALIGN HATCH TO PROVIDE CLEARANCE FOR PUMP REMOVAL.
2. COVER SHALL OPEN A MIN. OF 90° AND HAVE AN AUTO ENGAGING HOLD OPEN ARM.

Valve Chamber Plan

NOTES:

1. CONTROL PANEL AND ALARM TO BE LOCATED OUTSIDE AND ADJACENT TO THE PUMP STATION. CONTROL PANEL TO PROVIDE FOR AUTOMATIC ALTERNATING OF PUMPS. THE ALARM SYSTEM MUST MONITOR EACH PUMP FOR FAILURE TO DISCHARGE AND POWER FAILURE, BE EQUIPPED WITH A BATTERY BACK-UP POWER SUPPLY, AND THE SIGNAL MUST BE TRANSMITTED TO A 24-HOUR MANNED LOCATION. ALARM ANNUNCIATION SHALL BE LOCATED IN THE SAME LOCATION AS THE REMOTE CONTROL PANEL. SEE ELECTRICAL PLANS FOR DETAILS.
2. INSTALL REMOVABLE CAP, MARK 2/3 LINE UP FROM BOTTOM. REMOVE CAP AND CUT TOP 1/3 OFF OF CAP AND REINSTALL ENSURING OPEN 1/3 OF CAP IS POSITIONED AT THE TOP.
3. FLOAT ELEVATIONS FOR INITIAL BUILD-OUT REPRESENT CONDITIONS FOLLOWING CONSTRUCTION OF PHASE I IMPROVEMENTS. UPON CONSTRUCTION OF VISITORS CENTER AND REMAINING IMPROVEMENTS, FLOAT ELEVATIONS SHALL BE RESET TO "FULL BUILD OUT" CONFIGURATION AS DEPICTED ON THIS SHEET. FLOAT FOR "ALL PUMPS OFF" SHALL BE SET AT AN ELEVATION TO PROVIDE A MINIMUM OF 10 INCHES OF DEPTH AT PUMP OFF AND TO ENSURE THAT PUMPS REMAIN SUBMERGED PER MANUFACTURERS RECOMMENDATIONS.
4. PUMP SYSTEM SHALL BE BARNES FIBERGLASS DUPLEX BASIN PACKAGE SYSTEM OR EQUAL TO INCLUDE ALL ITEMS NECESSARY FOR PUMP STATION OPERATION, INCLUDING BUT NOT LIMITED TO, (2) SUBMERSIBLE GRINDER PUMPS, GUIDE RAIL SYSTEM WITH QUICK CONNECT BASE AND LIFT CHAINS, FLOAT SWITCH PUMP CONTROLS, CONTROL PANEL BOX WITH AUDIBLE AND VISUAL FLASHING ALARM FOR STATION FAILURE, LOCKING ACCESS HATCH, AND POWER SUPPLY.
5. PUMP SHALL BE BARNES MODEL #XSGV30*2L-3PH, 4.12" IMPELLER, 3450RPM, 60HZ, 3HP, 3 PHASE, CAPABLE OF 60 GPM @ 35 FEET TDH OR APPROVED EQUAL.
6. LOCATE WIRING AND FLOAT RACK ASSEMBLY TO PROVIDE CLEAR ACCESS TO RAISE AND LOWER PUMPS ON THE RAIL SYSTEM.
7. DO NOT GROUT ANNULAR RINGS AROUND PIPE GASKETS TO STRUCTURES.
8. COORDINATE LOCATION OF ALL PUMP AND ANCILLARY EQUIPMENT WITH MANHOLE STEPS.
9. OWNER SHALL ENSURE AVAILABILITY OF EQUIPMENT CAPABLE OF REMOVING PUMPS FOR MAINTENANCE/REPLACEMENT.
10. OWNER MUST PROVIDE PORTABLE EQUIPMENT OR HAVE A SERVICE COMPANY AVAILABLE TO SERVICE THE PUMP STATION IN CASE OF FAILURE.
11. PIPE AND CABLE INLETS SHALL BE WATERPROOF AND SEALED AT STRUCTURE.
12. PRESSURE PIPE AND FITTINGS SHALL BE SCHEDULE 40 SOLVENT WELDED JOINTS WITHIN AND BETWEEN PUMP STATION AND VALVE CHAMBER, AND IN FORCE MAIN.
13. ALL BALL AND CHECK VALVES SHALL BE BRASS.
14. CONCRETE SHALL BE A MINIMUM COMPRESSIVE STRENGTH 5000 PSI, TYPE II PORTLAND CEMENT.
15. CONCRETE VALVE CHAMBER BASE SHALL BE MONOLITHIC WITH A MINIMUM 2 FEET SIDE WALL DEPTH.
16. VALVE CHAMBER STEPS SHALL BE INSTALLED AT 12" O.C. FOR THE FULL DEPTH OF THE VALVE CHAMBER.
17. PRECAST CONCRETE EXTERIOR SURFACES SHALL BE GIVEN TWO COATS OF BITUMINOUS WATERPROOFING MATERIAL.
18. JOINT SEALANT BETWEEN PRECAST SECTIONS SHALL BE BUTYL RUBBER.

Grinder Pump - Plan View

N.T.S.

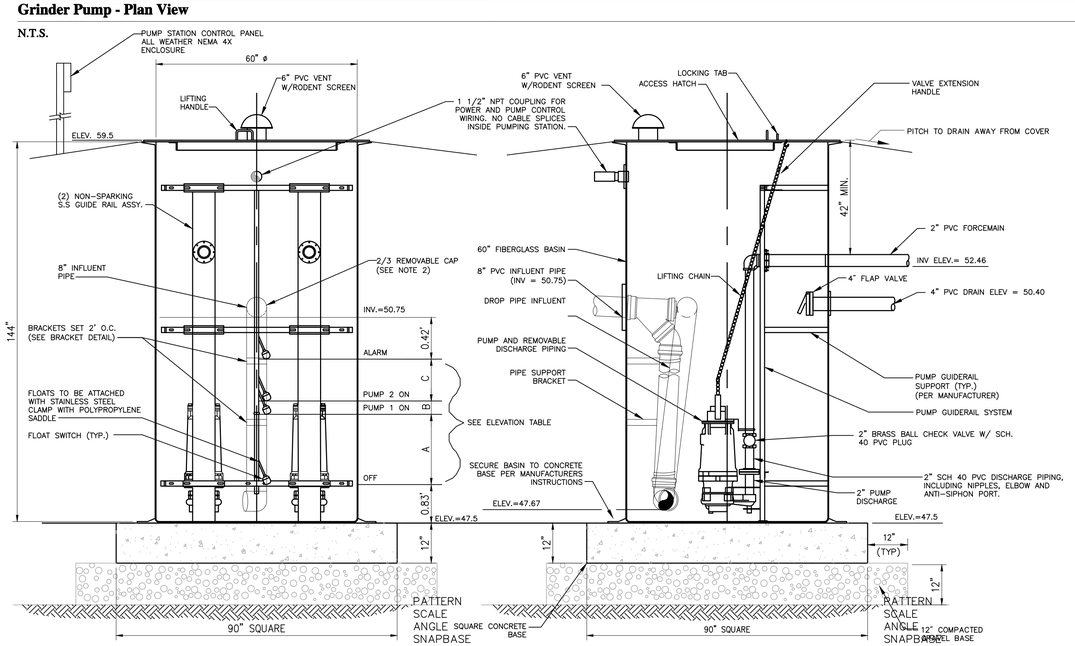

FLOAT ELEVATION TABLE				
DIMENSION	INITIAL BUILD OUT	ELEVATION	FULL BUILD OUT	ELEVATION
A	.2'	48.53	1'	49.33
B	.33'	48.86	.5'	49.83
C	1.47'	50.33	.5'	50.33

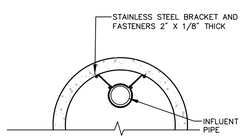

Bracket Detail

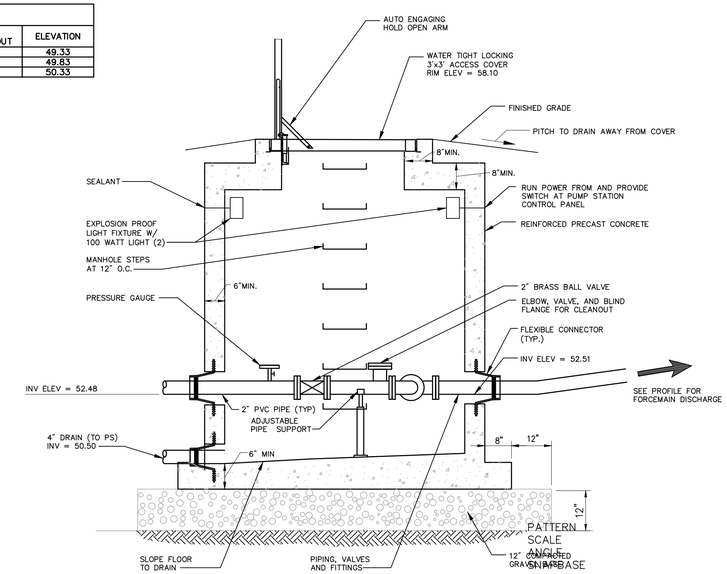

Valve Chamber Section

Grinder Pump - Section View

N.T.S.

QUINN EVANS ARCHITECTS

2121 WARD PLACE, NW
FOURTH FLOOR
WASHINGTON, DC 20036

v 202 298 6700
f 202 298 6666

WWW.QUINNEVANS.COM

vhb

115 SOUTH 15TH STREET
SUITE 200
RICHMOND, VIRGINIA 23219

804.343.7100 | FAX 804.343.1713

FERRY FARM PHASE 1 IMPROVEMENTS

268 Kings Hwy, Fredericksburg, VA 22405

QEA # 31402900

Details

COMMONWEALTH OF VIRGINIA
JOHN P. CARTY
Lic. No. 039452
12/19/14
PROFESSIONAL ENGINEER

SITE PERMIT SUBMISSION
12/19/14

REVISIONS

NO.	DESCRIPTION	DATE

C-608

12/30/2014 5:09:41 PM
I:\WBPROJ\RICHMOND\379\2.07 QEA FERRY FARM PHASE I\CAD\LDP\ACAD\SET\379\2.07-2.01

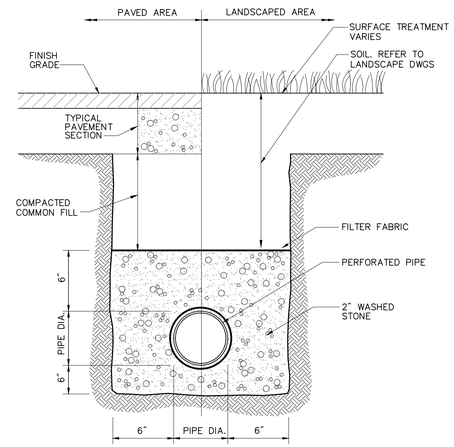

Subdrainage Trench with Underdrain (UD) 6/08

N.T.S. Source: VHB REV LD_184

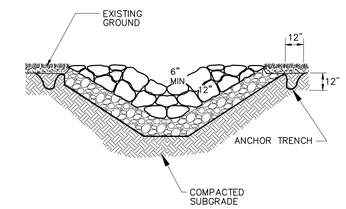

Riprap Channel 6/08

N.T.S. Source: VHB LD_170

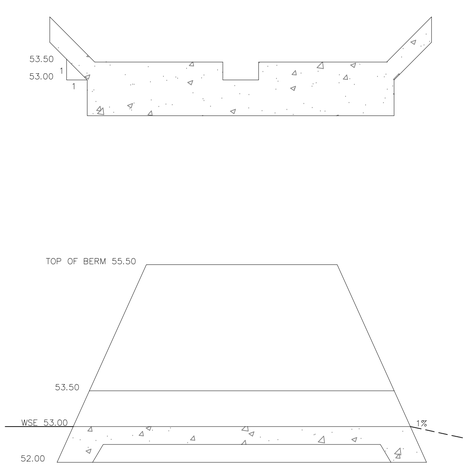

Maintenance Area Outlet Structure (Section A-A) 7/12

N.T.S. Source: VHB

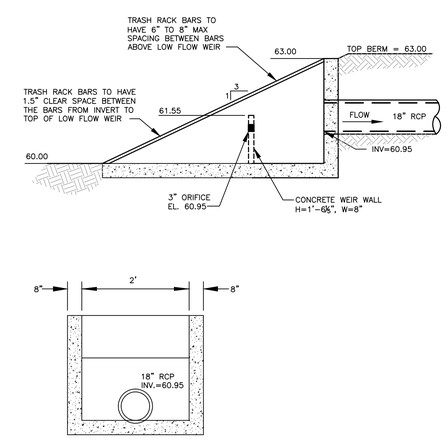

NOTE: REFER TO VDOT EW-11 DETAIL FOR DIMENSIONS AND REINFORCEMENT

Swale Outlet Structure (Modified VDOT EW-11) 7/12

N.T.S. Source: VHB

QUINN EVANS ARCHITECTS

2121 WARD PLACE, NW
FOURTH FLOOR
WASHINGTON, DC 20036

v 202 298 6700
f 202 298 6666

WWW.QUINNEVANS.COM

vhb

115 SOUTH 15TH STREET
SUITE 200
RICHMOND, VIRGINIA 23219

804.343.7100 | FAX 804.343.1713

FERRY FARM PHASE 1 IMPROVEMENTS

268 Kings Hwy, Fredericksburg, VA 22405

QEA # 31402900

Details

COMMONWEALTH OF VIRGINIA
JOHN P. CARTY
Lic. No. 039452
12/19/14
PROFESSIONAL ENGINEER

SITE PERMIT SUBMISSION
12/19/14

REVISIONS

NO.	DESCRIPTION	DATE

C-609

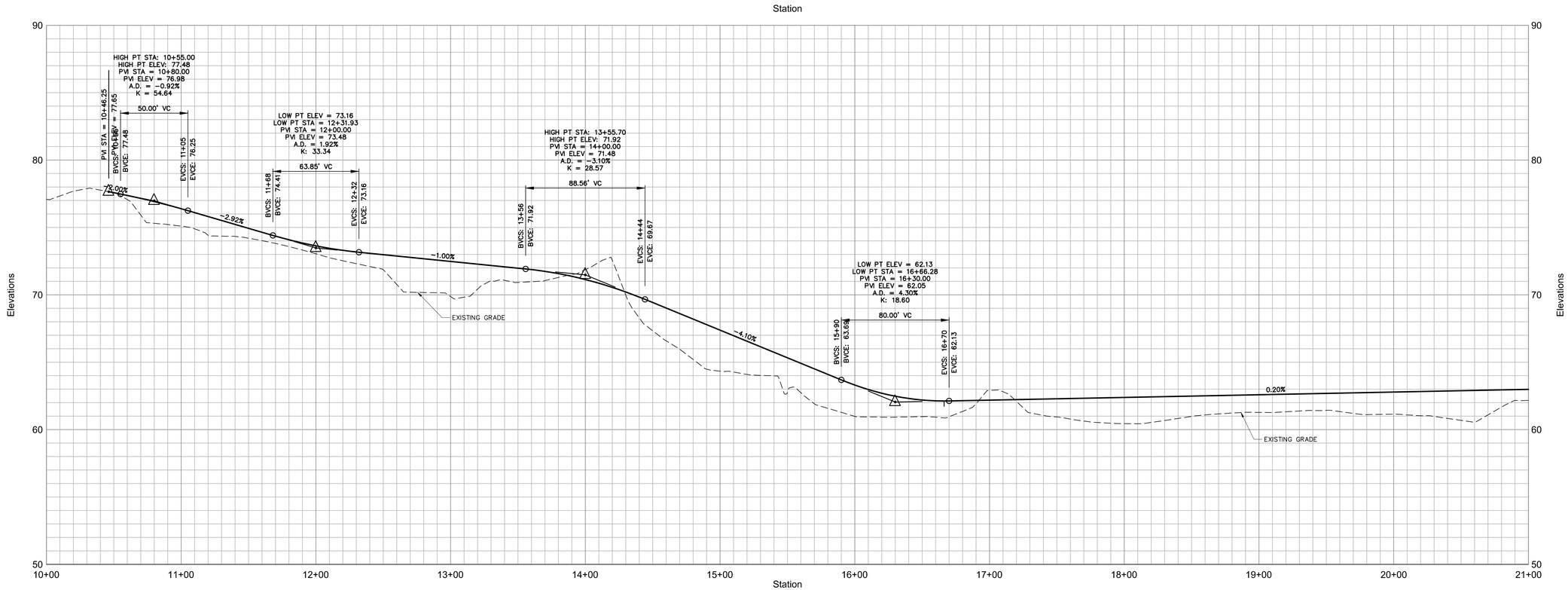

Entry Road 10+00 to 21+00

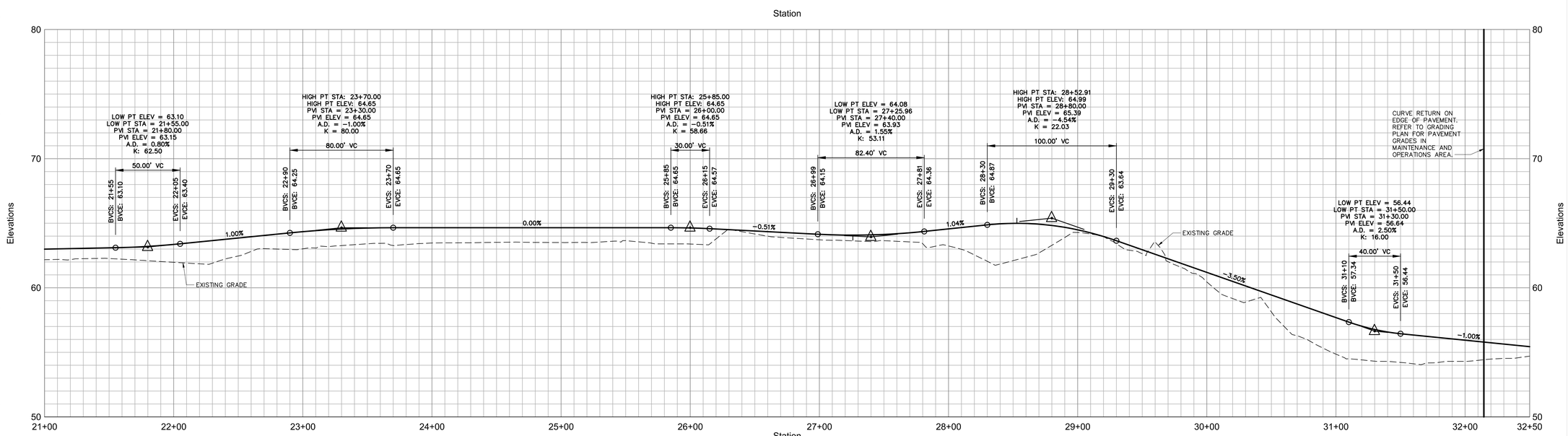

Entry Road 21+00 to 32+50

HORIZONTAL
40 0 40 80
4 0 4 8
VERTICAL
SCALE IN FEET

QUINN EVANS ARCHITECTS

2121 WARD PLACE, NW
FOURTH FLOOR
WASHINGTON, DC 20036

v 202 298 6700
f 202 298 6666

WWW.QUINNEVANS.COM

vhb

115 SOUTH 15TH STREET
SUITE 200
RICHMOND, VIRGINIA 23219

804.343.7100 | FAX 804.343.1713

FERRY FARM PHASE 1 IMPROVEMENTS

268 Kings Hwy, Fredericksburg, VA 22405

QEA # 31402900

Road Profile

COMMONWEALTH OF VIRGINIA
JOHN P. FARTY
Lic. No. 039452
12/19/14
PROFESSIONAL ENGINEER

SITE PERMIT SUBMISSION
12/19/14

REVISIONS

NO.	DESCRIPTION	DATE

C-701

12/9/2014 5:09:41 PM \\VHBPROJ\RICHMOND\37912\07 QEA FERRY FARM PHASE 1\CADD\PLANSET\37912-07.DP

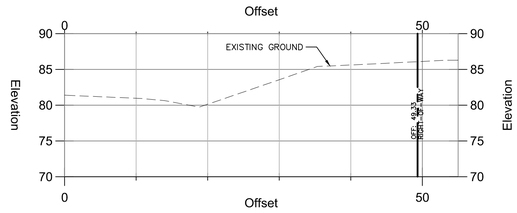

60+25.00

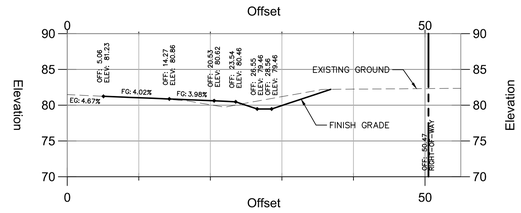

61+50.00

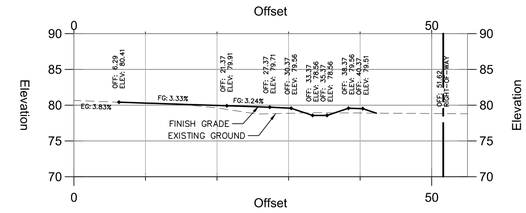

62+75.00

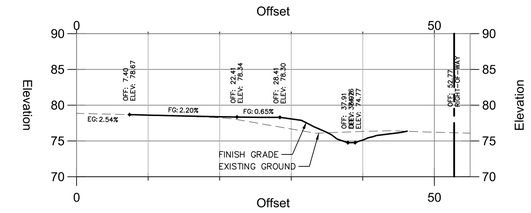

64+00.00

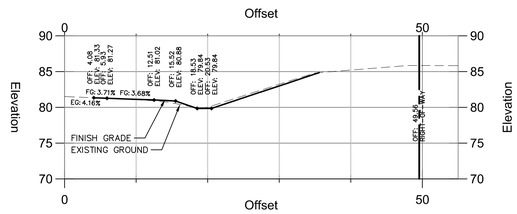

60+50.00

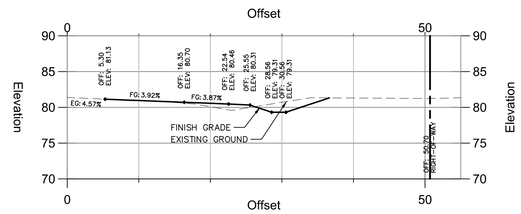

61+75.00

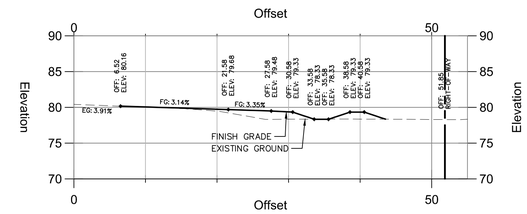

63+00.00

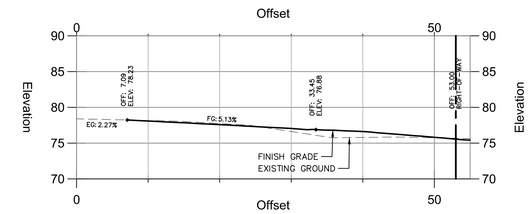

64+25.00

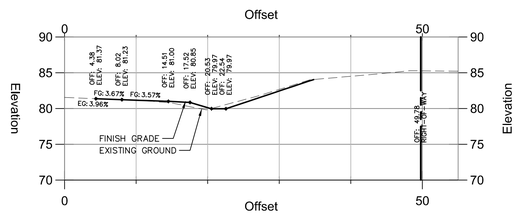

60+75.00

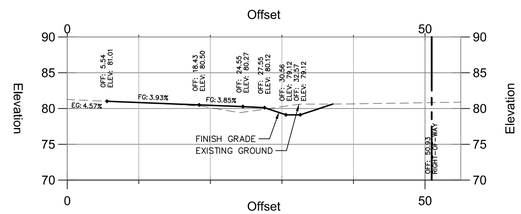

62+00.00

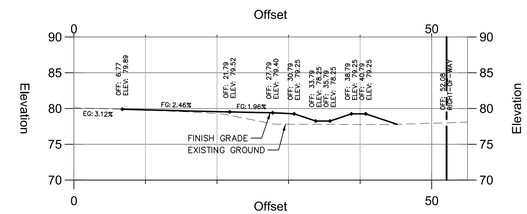

63+25.00

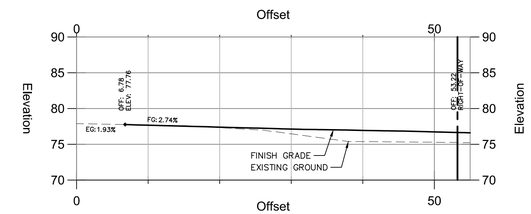

64+50.00

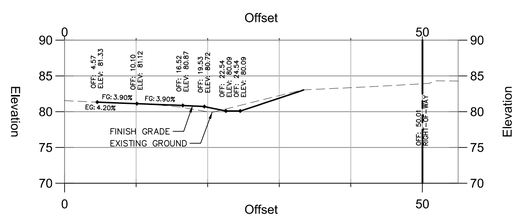

61+00.00

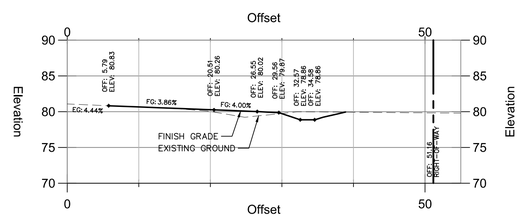

62+25.00

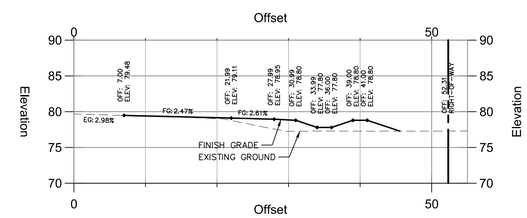

63+50.00

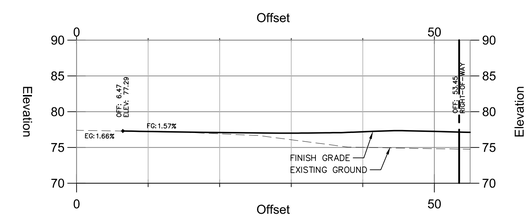

64+75.00

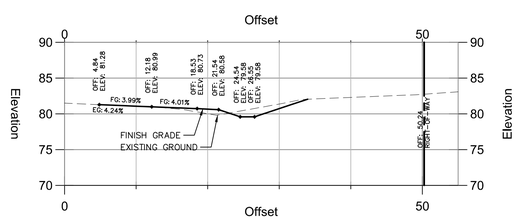

61+25.00

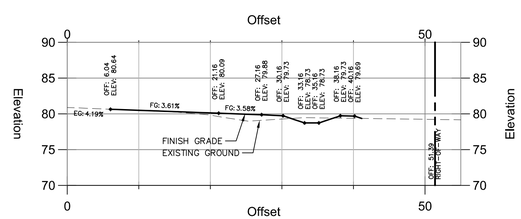

62+50.00

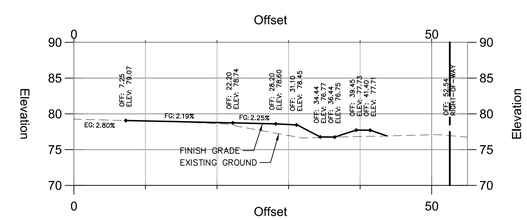

63+75.00

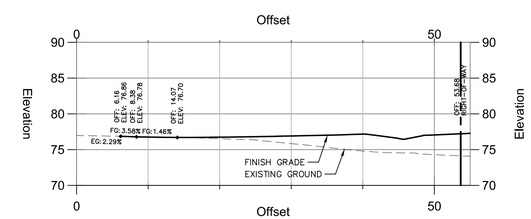

65+00.00

Kings Highway - East Bound Turn Lane

HORIZONTAL
10 0 10 20
10 0 10 20
VERTICAL
SCALE IN FEET

QUINN EVANS ARCHITECTS

2121 WARD PLACE, NW
FOURTH FLOOR
WASHINGTON, DC 20036

v 202 298 6700
f 202 298 6666

WWW.QUINNEVANS.COM

vhb

115 SOUTH 15TH STREET
SUITE 200
RICHMOND, VIRGINIA 23219

804.343.7100 | FAX 804.343.1713

FERRY FARM PHASE 1 IMPROVEMENTS

268 Kings Hwy, Fredericksburg, VA 22405

QEA # 31402900

Cross Sections

COMMONWEALTH OF VIRGINIA
JOHN P. CARTY
Lic. No. 039452
12/19/14
PROFESSIONAL ENGINEER

SITE PERMIT SUBMISSION
12/19/14

REVISIONS

NO.	DESCRIPTION	DATE

C-702

12/20/2014 5:09:41 PM \\VHBPROJRICHMOND\37912.07 QEA FERRY FARM PHASE1\CAD\LDP\ASNEET\37912.07.DPF

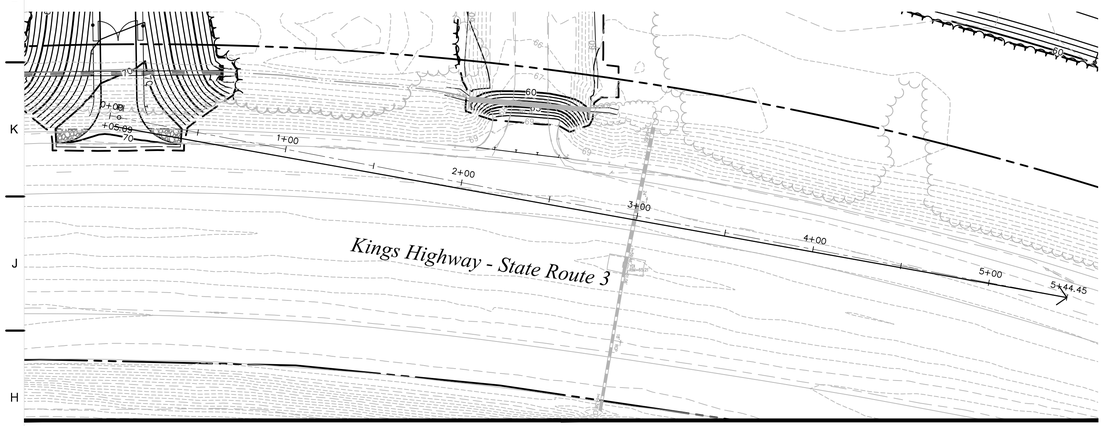

Sight Distance Left - Emergency Exit Road

Scale: 1"=40'

0 40 Feet

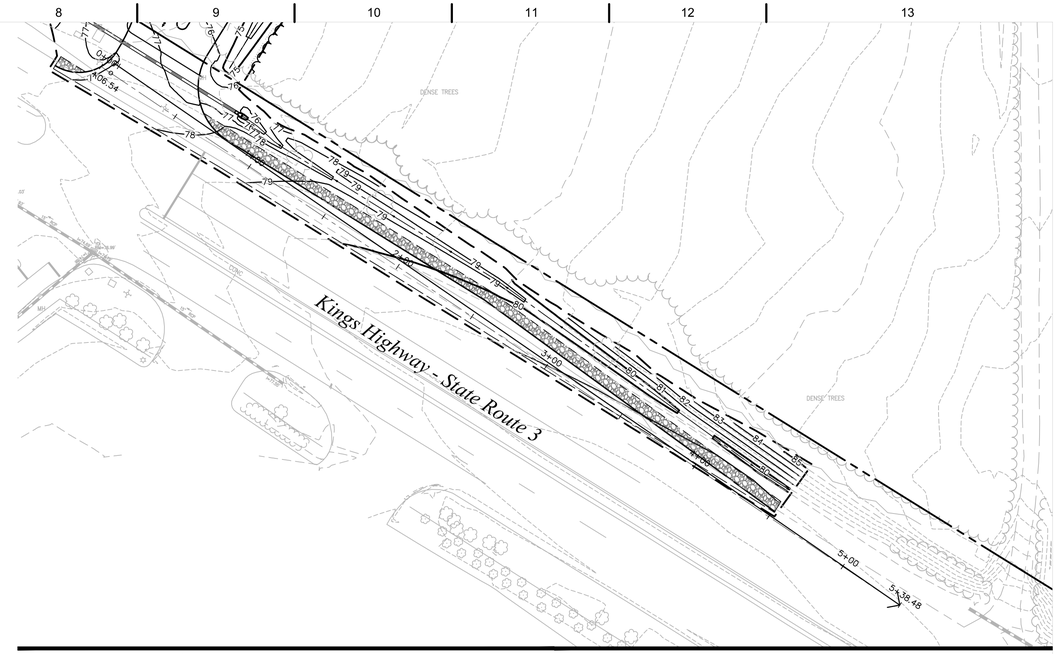

Sight Distance Left - Ferry Road

Scale: 1"=40'

0 40 Feet

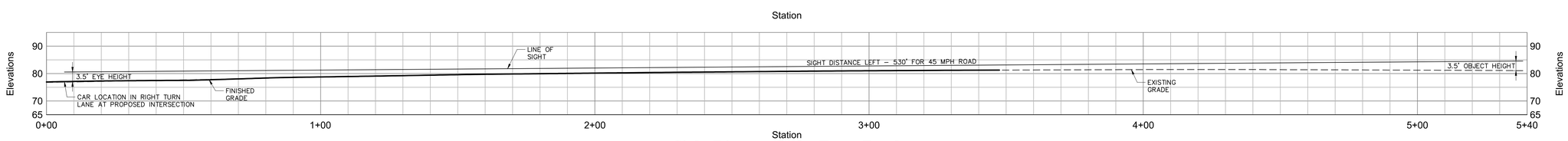

Sight Distance Left - Ferry Road

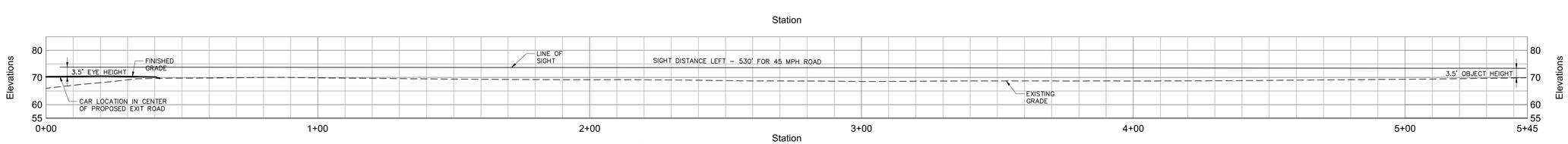

Sight Distance Left - Emergency Exit Road

HORIZONTAL
20 0 20 40
20 0 20 40
VERTICAL
SCALE IN FEET

QUINN EVANS
ARCHITECTS

2121 WARD PLACE, NW
FOURTH FLOOR
WASHINGTON, DC 20036

v 202 298 6700
f 202 298 6666

WWW.QUINNEVANS.COM

vhb

115 SOUTH 15TH STREET
SUITE 200
RICHMOND, VIRGINIA 23219

804.343.7100 | FAX 804.343.1713

FERRY FARM PHASE 1 IMPROVEMENTS

268 Kings Hwy, Fredericksburg, VA 22405

QEA # 31402900

Sight Distance

JOHN P. GARTY
Lic. No. 039452
12/19/14
COMMONWEALTH OF VIRGINIA
PROFESSIONAL ENGINEER

SITE PERMIT SUBMISSION
12/19/14

REVISIONS

NO.	DESCRIPTION	DATE

C-703

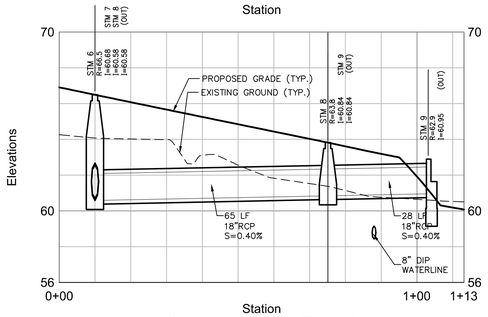

Storm Sewer - Run 4

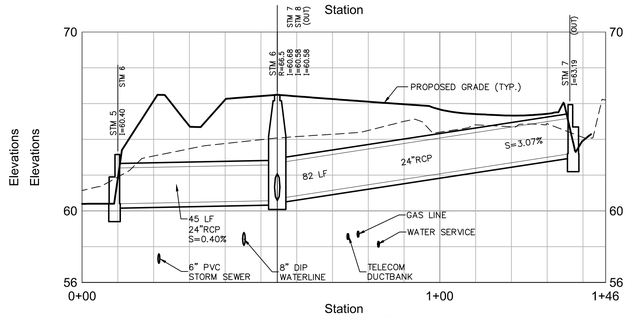

Storm Sewer - Run 3

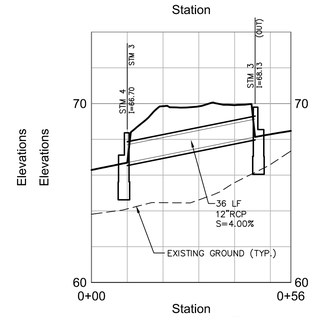

Storm Sewer - Run 2

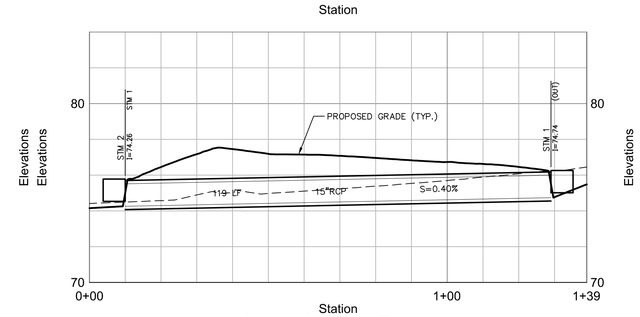

Storm Sewer - Run 1

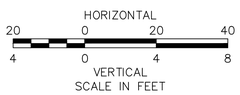

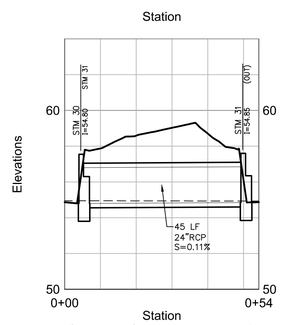

Storm Sewer - Run 9

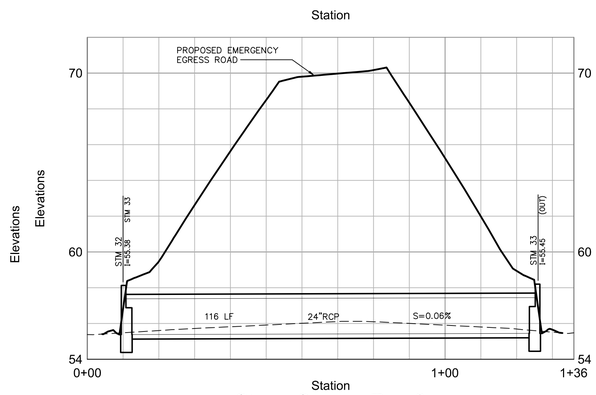

Storm Sewer - Run 8

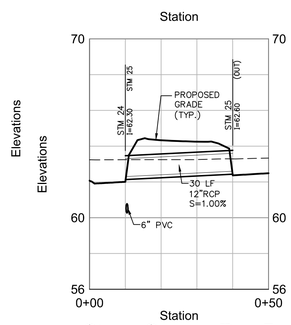

Storm Sewer - Run 7

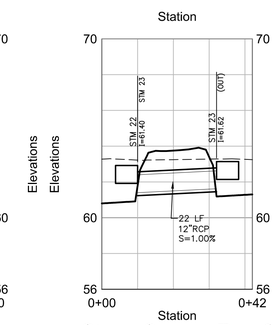

Storm Sewer - Run 6

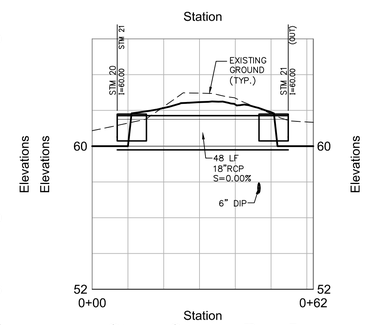

Storm Sewer - Run 5

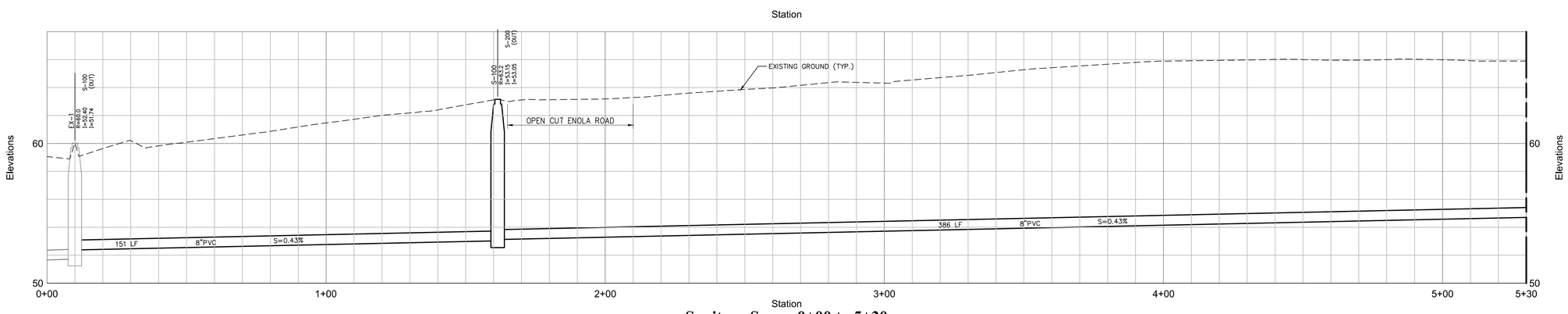

Sanitary Sewer 0+00 to 5+30

QUINN EVANS
ARCHITECTS

2121 WARD PLACE, NW
FOURTH FLOOR
WASHINGTON, DC 20036

v 202 298 6700
f 202 298 6666

WWW.QUINNEVANS.COM

vhb

115 SOUTH 15TH STREET
SUITE 200
RICHMOND, VIRGINIA 23219

804.343.7100 | FAX 804.343.1713

FERRY FARM PHASE 1 IMPROVEMENTS

268 Kings Hwy,
Fredericksburg, VA
22405

QEA # 31402900

Utility Profiles

COMMONWEALTH OF VIRGINIA
JOHN P. DORTY
Lic. No. 039452
12/19/14
PROFESSIONAL ENGINEER

SITE PERMIT SUBMISSION
12/19/14

REVISIONS

NO.	DESCRIPTION	DATE

C-704

12/19/2014 5:09:41 PM \\VHBPROJRICHMOND\37912.07 QEA FERRY FARM PHASE I\CAD\LDP\LANDSET\37912.07.rlf

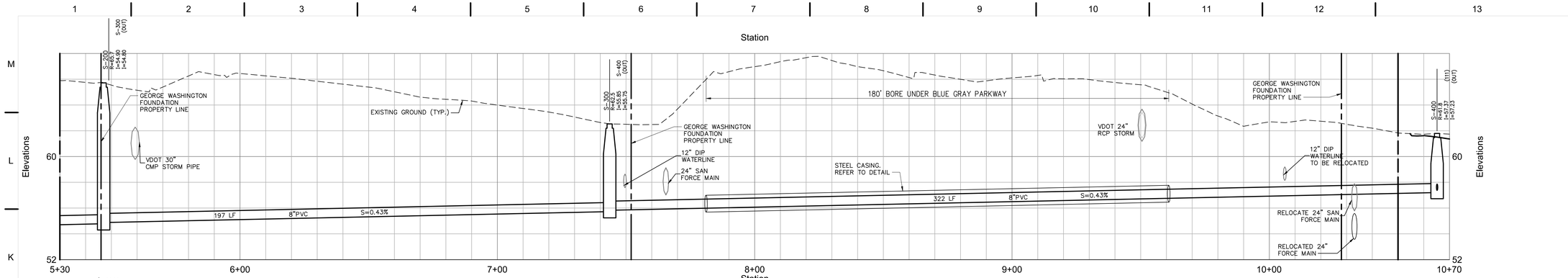

Sanitary Sewer 5+30 to 10+70

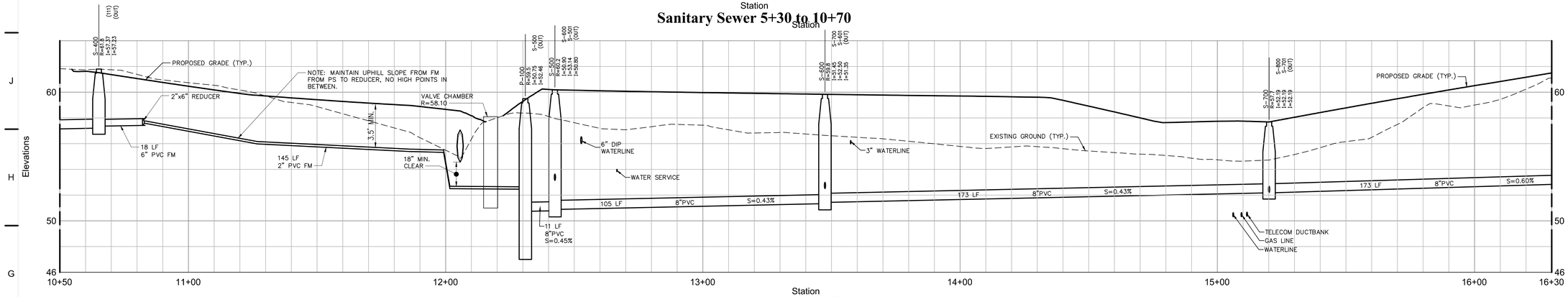

Sanitary Sewer 10+70 to 16+30

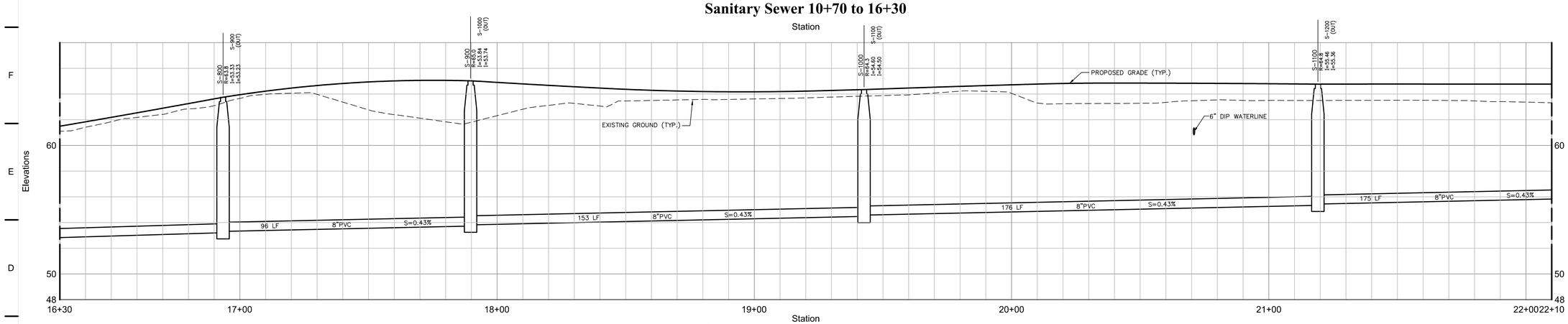

Sanitary Sewer 16+30 to 22+10

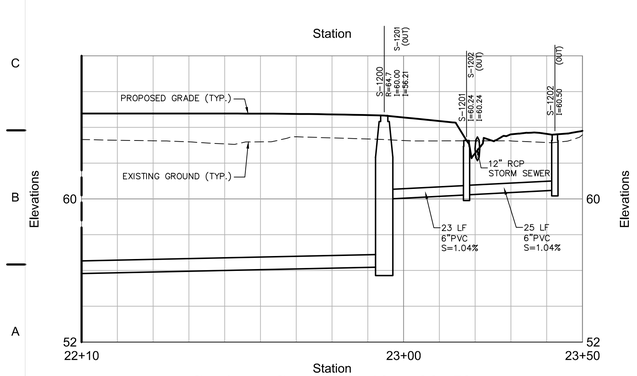

Sanitary Sewer 22+10 to 23+50

HORIZONTAL 20 0 20 40
VERTICAL SCALE IN FEET 4 0 4 8

QUINN EVANS ARCHITECTS
2121 WARD PLACE, NW
FOURTH FLOOR
WASHINGTON, DC 20036
v 202 298 6700
f 202 298 6666
WWW.QUINNEVANS.COM

vhb
115 SOUTH 15TH STREET
SUITE 200
RICHMOND, VIRGINIA 23219
804.343.7100 | FAX 804.343.1713

FERRY FARM PHASE 1 IMPROVEMENTS

268 Kings Hwy, Fredericksburg, VA 22405

QEA # 31402900

Utility Profiles

COMMONWEALTH OF VIRGINIA
JOHN P. CARTY
Lic. No. 039452
12/19/14
PROFESSIONAL ENGINEER

SITE PERMIT SUBMISSION
12/19/14

REVISIONS

NO.	DESCRIPTION	DATE

C-705

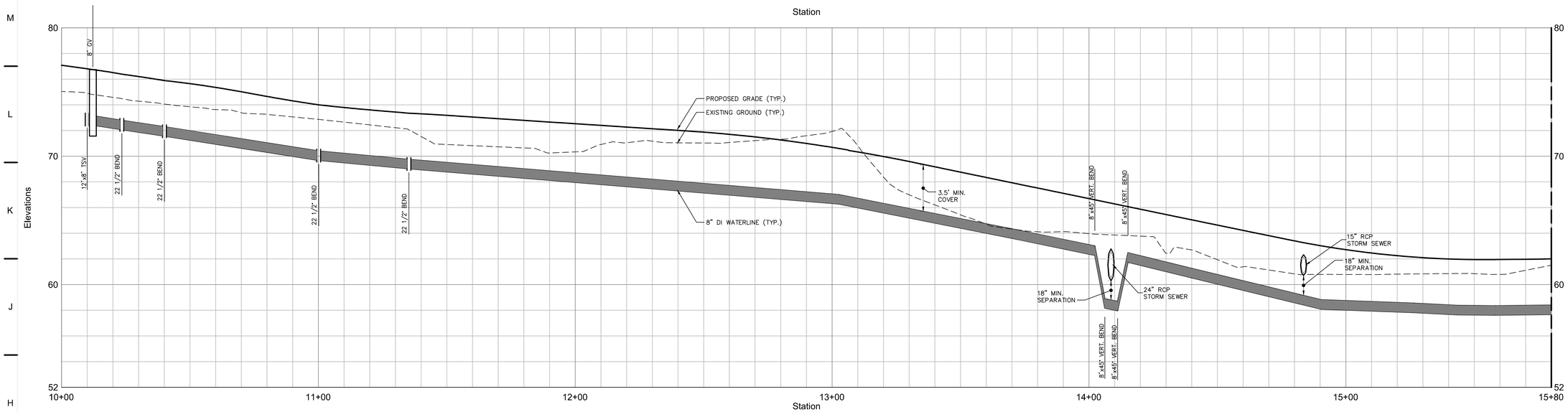

Waterline Profile 10+00 to 15+80

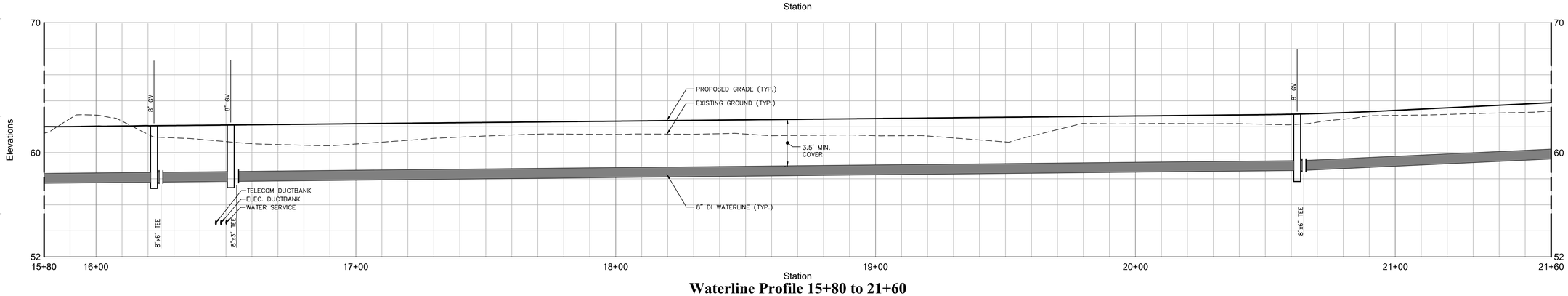

Waterline Profile 15+80 to 21+60

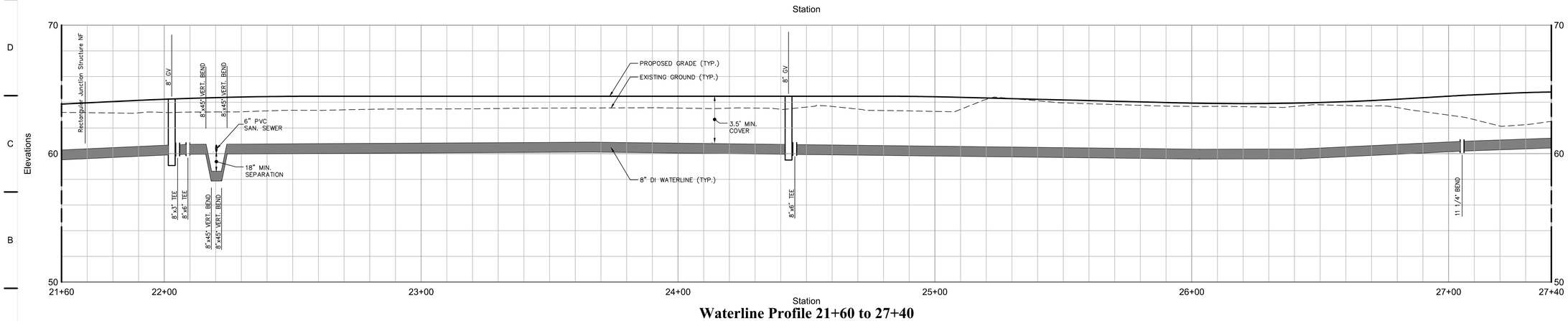

Waterline Profile 21+60 to 27+40

HORIZONTAL
20 0 20 40
4 0 4 8
VERTICAL
SCALE IN FEET

QUINN EVANS ARCHITECTS

2121 WARD PLACE, NW
FOURTH FLOOR
WASHINGTON, DC 20036

v 202 298 6700
f 202 298 6666

WWW.QUINNEVANS.COM

vhb

115 SOUTH 15TH STREET
SUITE 200
RICHMOND, VIRGINIA 23219

804.343.7100 | FAX 804.343.1713

FERRY FARM PHASE 1 IMPROVEMENTS

268 Kings Hwy, Fredericksburg, VA 22405

QEA # 31402900

Utility Profiles

COMMONWEALTH OF VIRGINIA
JOHN P. CARTY
Lic. No. 039452
12/19/14
PROFESSIONAL ENGINEER

SITE PERMIT SUBMISSION
12/19/14

REVISIONS

NO.	DESCRIPTION	DATE

C-706

12/9/2014 5:09:41 PM \\VHBPROJ\RICHMOND\37912.07 QEA FERRY FARM PHASE II\CAD\LDP\LANSE\37912.07.dwf

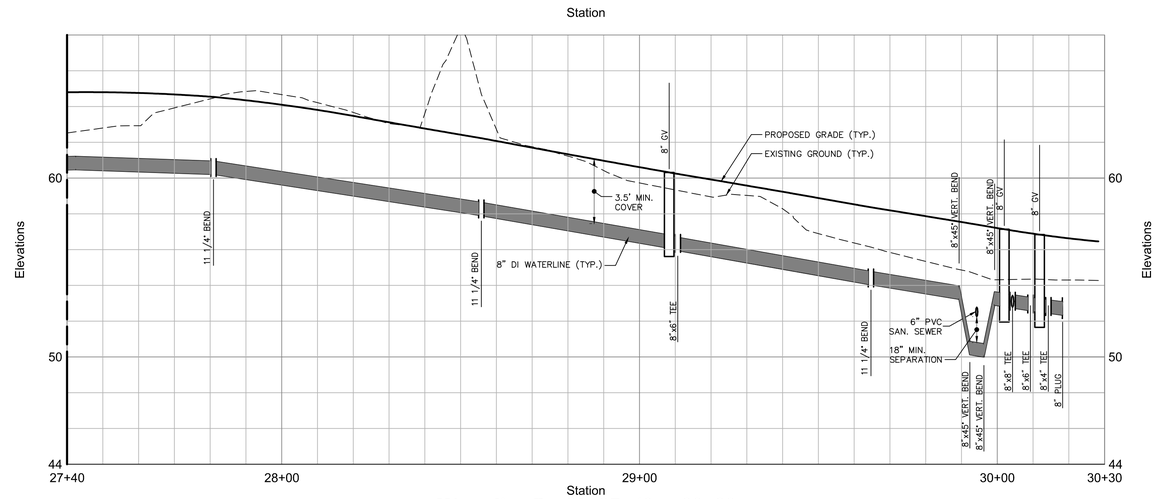

Waterline Profile 27+40 to 30+30

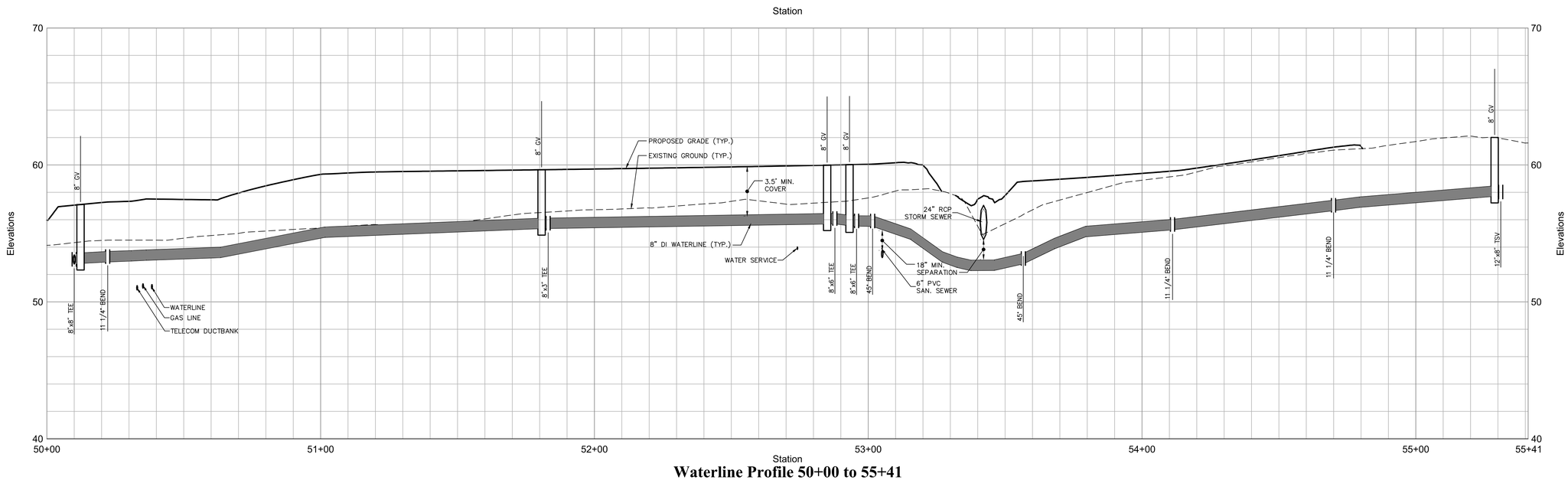

Waterline Profile 50+00 to 55+41

HORIZONTAL
20 0 20 40
4 0 4 8
VERTICAL
SCALE IN FEET

QUINN EVANS ARCHITECTS

2121 WARD PLACE, NW
FOURTH FLOOR
WASHINGTON, DC 20036

v 202 298 6700
f 202 298 6666

WWW.QUINNEVANS.COM

vhb

115 SOUTH 15TH STREET
SUITE 200
RICHMOND, VIRGINIA 23219

804.343.7100 | FAX 804.343.1713

FERRY FARM PHASE 1 IMPROVEMENTS

268 Kings Hwy, Fredericksburg, VA 22405

QEA # 31402900

Utility Profiles

COMMONWEALTH OF VIRGINIA
JOHN P. CARTY
Lic. No. 039452
12/19/14
PROFESSIONAL ENGINEER

SITE PERMIT SUBMISSION
12/19/14

REVISIONS

NO.	DESCRIPTION	DATE

C-707

12/9/2014 5:09:41 PM \\VHBPROJ\RICHMOND\37912.07 QEA FERRY FARM PHASE 1\CAD\LDP\LANSE\U37912.07.dwf

Pre-Development Drainage Areas

Drainage Area	Soil Group	Ultimate Outfall	Impervious (SF) 0.90	Turf (SF) 0.35	Forest (SF) 0.25	Total Area (SF)	Area (AC)	Weighted C
DA 1	D	River	23,217	529,507	198,042	750,766	17.235	0.34
DA 2	A	River	2,392	84,996	105,932	193,320	4.438	0.30
	B	River	0	20,048	0	20,048	0.460	0.35
	D	River	26,313	256,700	362,584	645,597	14.821	0.32
DA 3	A	Ravine	0	8,120	14,697	22,817	0.524	0.29
	B	Ravine	131	140,614	4,713	145,458	3.339	0.35
	C	Ravine	5,003	43,117	82,016	130,136	2.988	0.31
	D	Ravine	14,961	41,062	55,364	111,387	2.557	0.37
DA 4	B	Site	8,359	103,801	14,518	126,678	2.908	0.37
	D	Site	0	4,139	0	4,139	0.095	0.35
DA 5	B	Site	17,571	30,193	0	47,764	1.097	0.55
	D	Site	9,100	23,825	43,293	76,218	1.750	0.36
DA 6	A	VDOT	376	2,137	497	3,010	0.069	0.40
	B	VDOT	11,549	38,488	88,505	138,542	3.180	0.33
	C	VDOT	2,338	497	160	2,995	0.069	0.77
	D	VDOT	899	4,919	11,418	17,236	0.396	0.31
DA 7	A	VDOT	372	10,276	11,882	22,530	0.517	0.31
	B	VDOT	5,746	9,542	12,022	27,310	0.627	0.42
	D	VDOT	807	7,206	113,882	121,895	2.798	0.26
Total			**129,134**	**1,359,187**	**1,119,525**	**2,607,846**	**59.868**	**0.33**

QUINN EVANS ARCHITECTS

2121 WARD PLACE, NW
FOURTH FLOOR
WASHINGTON, DC 20036

v 202 298 6700
f 202 298 6666

WWW.QUINNEVANS.COM

vhb

115 SOUTH 15TH STREET
SUITE 200
RICHMOND, VIRGINIA 23219

804.343.7100 | FAX 804.343.1713

FERRY FARM PHASE 1 IMPROVEMENTS

268 Kings Hwy, Fredericksburg, VA 22405

QEA # 31402900

Pre-Development Drainage Areas

COMMONWEALTH OF VIRGINIA
JOHN P. CARTY
Lic. No. 039452
12/19/14
PROFESSIONAL ENGINEER

SITE PERMIT SUBMISSION
12/19/14

REVISIONS

NO.	DESCRIPTION	DATE

C-801

12/9/2014 5:09:41 PM
\\VHB\PROJ\RICHMOND\79712.07 QEA FERRY FARM PHASE I\CAD\LDP\LANDET\C801-DA.dwg

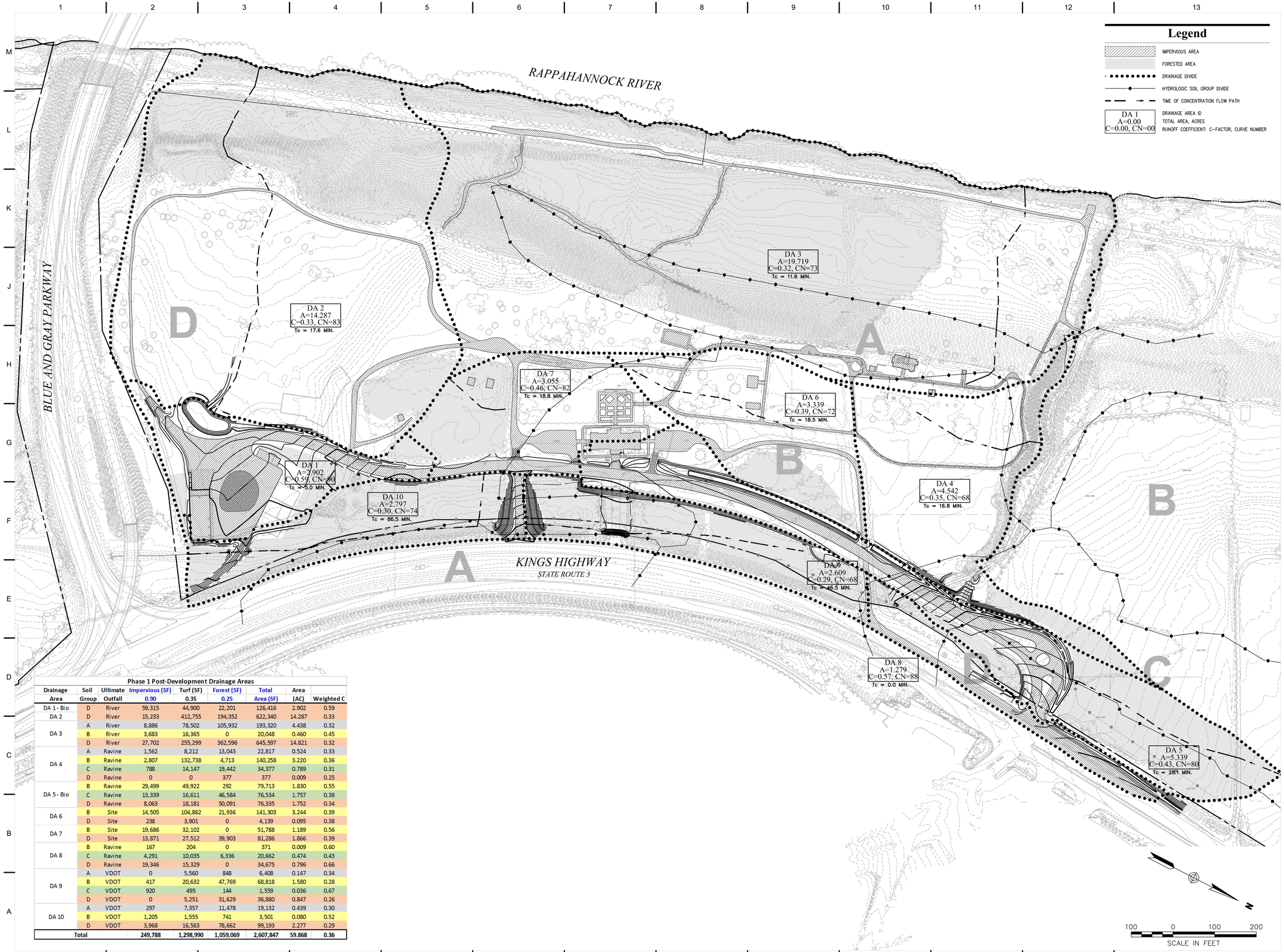

Phase 1 Post-Development Drainage Areas

Drainage Area	Soil Group	Ultimate Outfall	Impervious (SF) 0.90	Turf (SF) 0.35	Forest (SF) 0.25	Total Area (SF)	Area (AC)	Weighted C
DA 1 - Bio	D	River	59,315	44,900	22,201	126,416	2.902	0.59
DA 2	D	River	15,233	412,755	194,352	622,340	14.287	0.33
DA 3	A	River	8,886	78,502	105,932	193,320	4.438	0.32
	B	River	3,683	16,365	0	20,048	0.460	0.45
	D	River	27,702	255,299	362,596	645,597	14.821	0.32
DA 4	A	Ravine	1,562	8,212	13,043	22,817	0.524	0.33
	B	Ravine	2,807	132,738	4,713	140,258	3.220	0.36
	C	Ravine	788	14,147	19,442	34,377	0.789	0.31
	D	Ravine	0	0	377	377	0.009	0.25
DA 5 - Bio	B	Ravine	29,499	49,922	292	79,713	1.830	0.55
	C	Ravine	13,339	16,611	46,584	76,534	1.757	0.38
	D	Ravine	8,063	18,181	50,091	76,335	1.752	0.34
DA 6	B	Site	14,505	104,862	21,936	141,303	3.244	0.39
	D	Site	238	3,901	0	4,139	0.095	0.38
DA 7	B	Site	19,686	32,102	0	51,788	1.189	0.56
	D	Site	13,871	27,512	39,903	81,286	1.866	0.39
DA 8	B	Ravine	167	204	0	371	0.009	0.60
	C	Ravine	4,291	10,035	6,336	20,662	0.474	0.43
	D	Ravine	19,346	15,329	0	34,675	0.796	0.66
DA 9	A	VDOT	0	5,560	848	6,408	0.147	0.34
	B	VDOT	417	20,632	47,769	68,818	1.580	0.28
	C	VDOT	920	495	144	1,559	0.036	0.67
	D	VDOT	0	5,251	31,629	36,880	0.847	0.26
DA 10	A	VDOT	297	7,357	11,478	19,132	0.439	0.30
	B	VDOT	1,205	1,555	741	3,501	0.080	0.52
	D	VDOT	3,968	16,563	78,662	99,193	2.277	0.29
Total			**249,788**	**1,298,990**	**1,059,069**	**2,607,847**	**59.868**	**0.36**

QUINN EVANS ARCHITECTS

2121 WARD PLACE, NW
FOURTH FLOOR
WASHINGTON, DC 20036

v 202 298 6700
f 202 298 6666

WWW.QUINNEVANS.COM

vhb

115 SOUTH 15TH STREET
SUITE 200
RICHMOND, VIRGINIA 23219

804.343.7100 | FAX 804.343.1713

FERRY FARM PHASE 1 IMPROVEMENTS

268 Kings Hwy, Fredericksburg, VA 22405

QEA # 31402900

Post-Development Drainage Areas

COMMONWEALTH OF VIRGINIA
JOHN P. CARTY
Lic. No. 039452
12/19/14
PROFESSIONAL ENGINEER

SITE PERMIT SUBMISSION
12/19/14

REVISIONS

NO.	DESCRIPTION	DATE

C-802

12/9/2014 5:09:41 PM \\VHBPROJ\RICMOND\27912.07 QEA FERRY FARM PHASE 1\CAD\LDP\LANSE\LT\27912.07-C2A

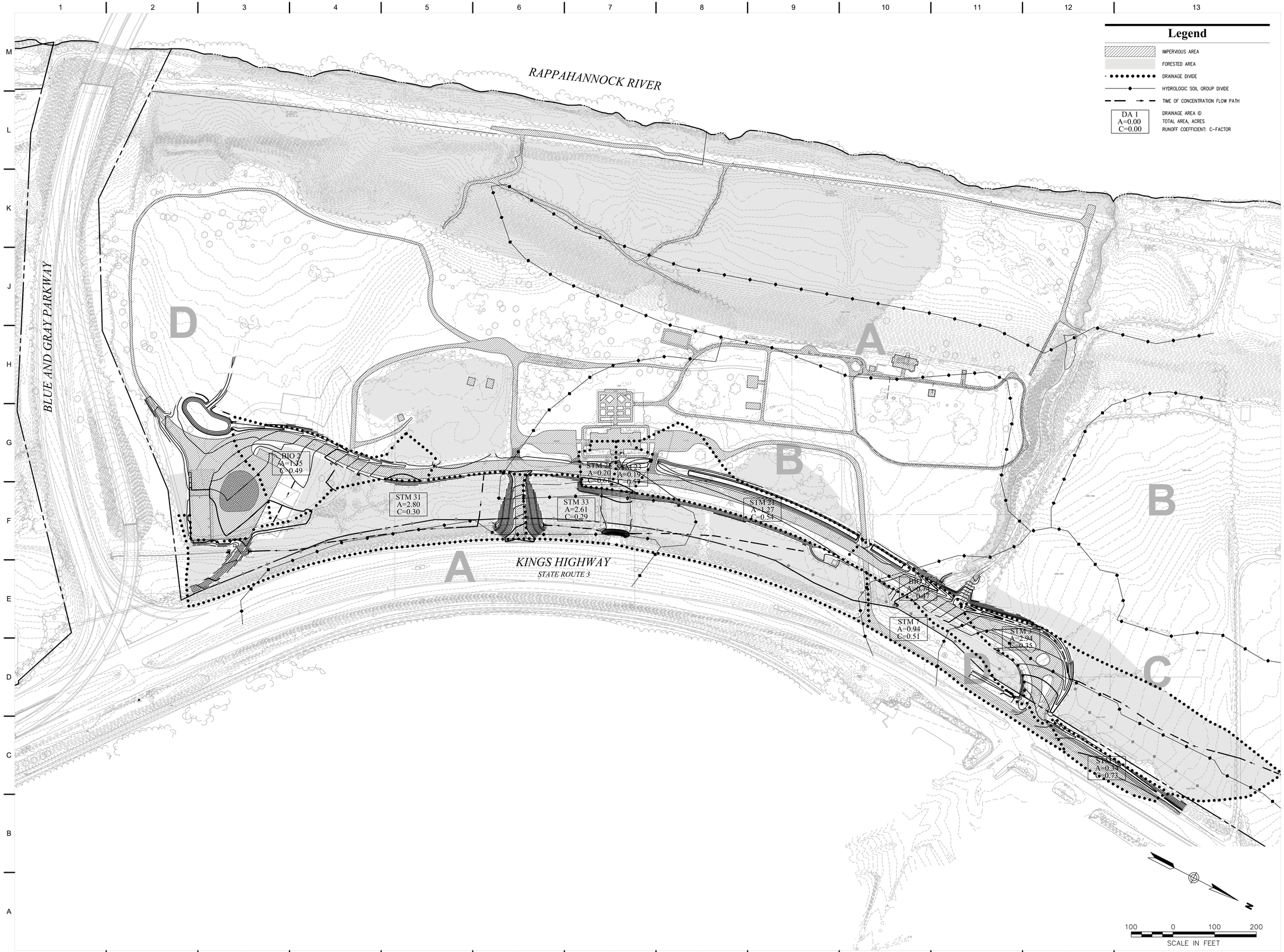

QUINN EVANS
ARCHITECTS

2121 WARD PLACE, NW
FOURTH FLOOR
WASHINGTON, DC 20036

v 202 298 6700
f 202 298 6666

WWW.QUINNEVANS.COM

vhb

115 SOUTH 15TH STREET
SUITE 200
RICHMOND, VIRGINIA 23219

804.343.7100 | FAX 804.343.1713

FERRY FARM PHASE 1 IMPROVEMENTS

268 Kings Hwy, Fredericksburg, VA 22405

QEA # 31402900

Culvert Drainage Areas

COMMONWEALTH OF VIRGINIA
JOHN P. CARTY
Lic. No. 039452
12/19/14
PROFESSIONAL ENGINEER

SITE PERMIT SUBMISSION
12/19/14

REVISIONS

NO.	DESCRIPTION	DATE

C-803

12/9/2014 5:09:41 PM \\VHBPROJ\RICHMOND\37912.07 QEA FERRY FARM PHASE I\CAD\LDP\LANSE\TU37912.07-C2A

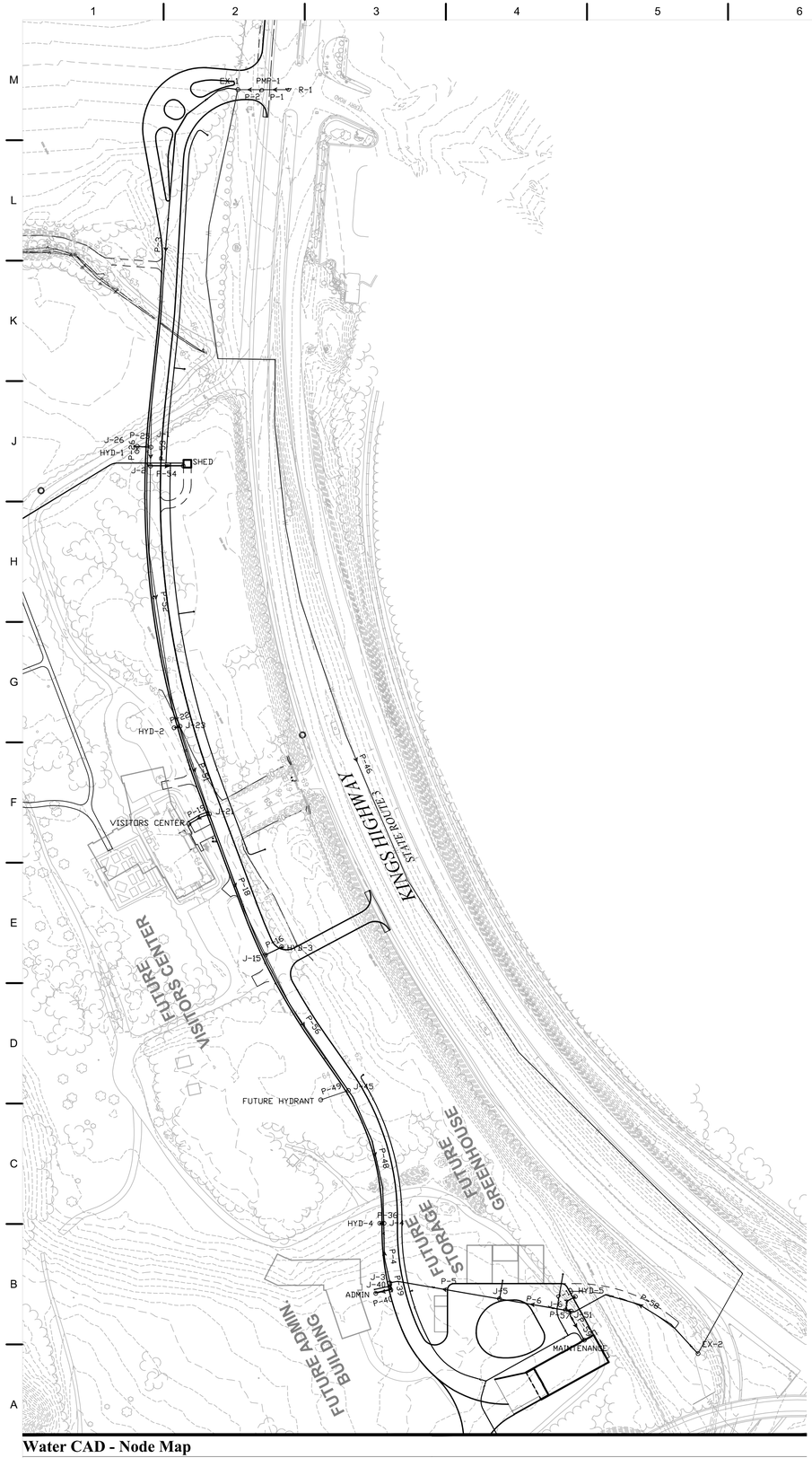

Water CAD - Node Map

540--

04:10:53 p.m. 11-03-2014 1 /2

County of Stafford
Department of Utilities
Water System Flow Analysis

Project: Ferry Farm Improvements Phase I

Date: November 3, 2014

Requested by: Rebecca Clayton

Fax Number: 1-804-343-1713

Node Number: 67192

Node Elevation: 80 ft

Required Fire Flows
Residential: 1500 gpm
Commercial: 2500 gpm

Design hydraulic grade line and pressures

	Pressure (PSI)	HGL (ft)
Maximum Static	103.9	320
Design Static	103.0	318
500 GPM	100.6	312
1000 GPM	96.5	303
1500 GPM	90.6	289
2000 GPM	82.8	271
2500 GPM	72.3	247
3000 GPM	59.9	218
3500 GPM	45.8	186
4000 GPM	29.9	149
4500 GPM	12.3	106

Notes:
1. If the present water system cannot furnish the required fire flows, the developer shall consult with the Stafford County Chief of Fire and Rescue.
2. Hydraulic analysis was based upon:
   a. Present distribution system geometry and control
   b. Plus the following planned improvements: None
   c. CY 2011 water demands
   d. Average daily demands and peak hourly demands

WATER MODEL CURRENT CONDITION 050114 — **County of Stafford**

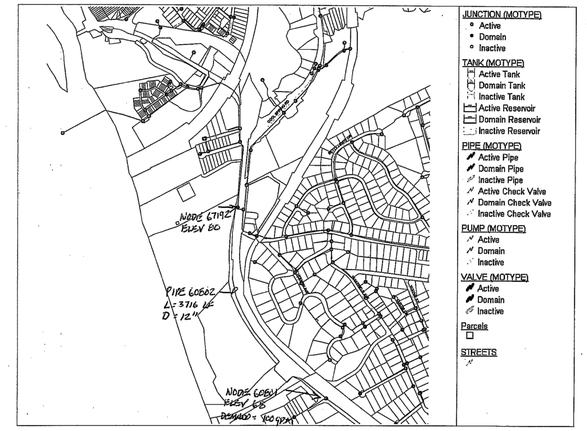

Prepared By: Date: 11/3/2014 8:35:45 PM

540-- 04:10:59 p.m. 11-03-2014 2 /2

Stafford County Flow Test

11/2014

Label	Length (Scaled) (ft)	Start Node	Stop Node	Diameter (in)	Material	Hazen-Williams C	Flow (gpm)	Velocity (ft/s)	Headloss Gradient (ft/ft)
P-1	41.93	R-1	PMP-1	8.0	Ductile Iron	120.0	2,792	17.82	0.142
P-2	36.91	PMP-1	EX-1	8.0	Ductile Iron	120.0	2,792	17.82	0.142
P-3	617.86	EX-1	J-1	8.0	Ductile Iron	120.0	1,018	6.50	0.022
P-4	93.64	J-4	J-3	8.0	Ductile Iron	120.0	-597	3.81	0.008
P-5	173.34	J-3	J-5	8.0	Ductile Iron	120.0	-697	4.45	0.011
P-6	104.54	J-5	J-6	8.0	Ductile Iron	120.0	-697	4.45	0.011
P-10	29.10	J-6	HYD-5	6.0	Ductile Iron	120.0	1,000	11.35	0.086
P-16	28.05	J-15	HYD-3	6.0	Ductile Iron	120.0	0	0.00	0.000
P-18	236.53	J-21	J-15	8.0	Ductile Iron	120.0	903	5.77	0.018
P-19	35.68	J-21	VISITORS CENTER	6.0	Ductile Iron	120.0	100	1.13	0.001
P-22	9.49	J-23	HYD-2	6.0	Ductile Iron	120.0	0	0.00	0.000
P-25	21.31	J-1	J-26	8.0	Ductile Iron	120.0	0	0.00	0.000
P-26	8.44	J-26	HYD-1	6.0	Ductile Iron	120.0	0	0.00	0.000
P-36	6.57	HYD-4	J-4	6.0	Ductile Iron	120.0	-1,500	17.02	0.182
P-39	10.99	J-40	J-3	8.0	Ductile Iron	120.0	-100	0.64	0.000
P-40	24.19	ADMIN	J-40	6.0	Ductile Iron	120.0	-100	1.13	0.001
P-46	2,311.11	EX-1	EX-2	12.0	Ductile Iron	120.0	1,774	5.03	0.008
P-48	217.14	J-45	J-4	8.0	Ductile Iron	120.0	903	5.77	0.018
P-49	45.63	J-45	FUTURE HYDRANT	6.0	Ductile Iron	120.0	0	0.00	0.000
P-51	143.99	J-23	J-21	8.0	Ductile Iron	120.0	1,003	6.40	0.021
P-52	409.86	J-23	J-2	8.0	Ductile Iron	120.0	-1,003	6.40	0.021
P-53	29.39	J-2	J-1	8.0	Ductile Iron	120.0	-1,018	6.50	0.022
P-54	51.31	J-2	SHED	3.0	Copper	135.0	15	0.68	0.001
P-55	639.76	SHED	HOME FARM	6.0	Ductile Iron	120.0	15	0.17	0.000
P-56	247.99	J-15	J-45	8.0	Ductile Iron	120.0	903	5.77	0.018
P-57	9.12	J-6	J-51	8.0	Ductile Iron	120.0	-1,697	10.83	0.056
P-58	235.03	J-51	EX-2	8.0	Ductile Iron	120.0	-1,774	11.32	0.061
P-59	51.26	J-51	MAINTENANCE	3.0	Copper	135.0	77	3.49	0.018

Water CAD - Pipe Table

Label	Elevation (ft)	Demand (gpm)	Pressure (psi)	Hydraulic Grade (ft)
ADMIN	55.19	100	88.1	258.93
EX-1	76.82	0	95.1	296.51
EX-2	70.29	0	89.4	276.88
FUTURE HYDRANT	63.60	0	85.8	262.02
HOME FARM	62.84	15	94.9	282.26
HYD-1	63.13	0	95.1	282.97
HYD-2	63.00	0	91.1	273.59
HYD-3	62.57	0	88.2	266.37
HYD-4	59.84	1,500	85.3	257.01
HYD-5	60.02	1,000	86.3	259.48
J-1	62.08	0	95.6	282.97
J-2	62.15	0	95.3	282.33
J-3	56.53	0	87.6	258.97
J-4	60.22	0	85.7	258.20
J-5	60.05	0	86.9	260.85
J-6	60.01	0	87.4	261.98
J-15	62.11	0	88.4	266.37
J-21	64.24	0	89.2	270.52
J-23	62.99	0	91.1	273.59
J-26	63.22	0	95.1	282.97
J-40	56.44	0	87.6	258.96
J-45	64.10	0	85.6	262.02
J-51	60.05	0	87.6	262.49
MAINTENANCE	60.43	77	87.0	261.59
SHED	61.50	0	95.5	282.29
VISITORS CENTER	63.17	100	89.7	270.48

Water CAD - Junction Table

WATER METER SIZING FORM
DEPARTMENT OF UTILITIES STAFFORD COUNTY, VIRGINIA

Business Name: The George Washington Foundation
Commercial Change Permit Number:
Address of Building: Maintenance and Operations Building - 268 Kings Highway, Fredericksburg, Virginia 22405
Form Completed By: Company: VHB
Name: Rebecca Clayton
Address: 115 South 15th Street, Suite 200, Richmond, Virginia 23219
Telephone: 804.343.7100
I certify that the information on this form is true and correct.
Owner Name (Print) _____ Telephone: _____
Signature: Date:

Part A

Fixture		Fixture Value 35 psi		No. of Fixtures		Fixture Value
Bathtub		8	x		=	
Bedpan Washers		10	x		=	
Combination Sink and Tray		3	x		=	
Dental Unit		1	x		=	
Dental Lavatory		2	x		=	
Drinking Fountain	Cooler	1	x		=	
	Public	2	x		=	
Kitchen Sink	½" Connection	3	x		=	
	¾" Connection	7	x	1	=	7
Lavatory	¾" Connection	2	x		=	
	½" Connection	4	x		=	
Laundry Tray	½" Connection	3	x		=	
	¾" Connection	7	x		=	
Shower Head (Shower Only)		4	x		=	
Service Sink	½" Connection	3	x		=	
	¾" Connection	7	x	1	=	7
Urinal	-Pedestal Flush Valve	35	x		=	
	-Wall Flush Valve	12	x		=	
	-Trough (2 Ft. Unit)	2	x		=	
Wash Sink (Each Set of Faucets)		4	x		=	
Water Closet	Flush Valve	35	x	2	=	70
	Tank Type	3	x		=	
Dishwasher	½" Connection	5	x		=	
	¾" Connection	10	x	1	=	10
Washing Machine	½" Connection	5	x		=	
	¾" Connection	12	x		=	
	1" Connection	25	x		=	
Hose Connection (Wash Down)	½"	6	x		=	
	¾"	10	x		=	
Hose (50 Ft. Wash Down)	½"	6	x		=	
	¾"	9	x		=	
	1¼"	12	x		=	
			Combined Fixture Value Total		=	94

OR

Part B

(1)	Domestic Demand (Verification by County Staff)	= 48	gpm
(2)	Fixed Load	=	gpm
(3)	Irrigation Demand (From Data Supplied by Designer)	= 29	gpm
(4)	Total Demand	= 77	gpm

COUNTY USE ONLY: Ex-Meter Size _____ Account _____
Required Meter Size _____
Sized By: _____ Date _____

Appendix – 1

Reprinted from Manual 22 "Sizing Water Service Lines and Meters" by permission. Copyright © 1975, American Water Works Association

Water Meter Sizing Form - Maintenance Building

Source: Department of Utilities Stafford County, VA

QUINN EVANS ARCHITECTS
2121 WARD PLACE, NW
FOURTH FLOOR
WASHINGTON, DC 20036
v 202 298 6700
f 202 298 6666
WWW.QUINNEVANS.COM

vhb
115 SOUTH 15TH STREET
SUITE 200
RICHMOND, VIRGINIA 23219
804.343.7100 | FAX 804.343.1713

FERRY FARM PHASE 1 IMPROVEMENTS

268 Kings Hwy, Fredericksburg, VA 22405

QEA # 31402900

Calculations

COMMONWEALTH OF VIRGINIA
JOHN P. CARTY
Lic. No. 039452
12/19/14
PROFESSIONAL ENGINEER

SITE PERMIT SUBMISSION
12/19/14

REVISIONS

NO.	DESCRIPTION	DATE

C-901

I:\VHB\PROJ\RICH\MOND\37912.07 QEA FERRY FARM PHASE I\CAD\LDP\ANSE1\37912.07-CALC
12/9/2014 5:09:41 PM

VHB *Computations*

Project: Ferry Farm Project # 37912.07
Location: Sheet of
Calculated by: R. Clayton Date:
Checked by: Date:
Title BIORETENTION SIZING

Drainage Area A: Northern Swale

Area = 5.36 AC

	B	C	D
forest	0.01	1.07	1.15
turf	1.15	0.38	0.42
imp.	0.68	0.31	0.19

coefficients

	B	C	D
	0.03	0.04	0.05
	0.20	0.22	0.25
	0.95	0.95	0.95

$$R_v = \frac{[(0.03)(0.01)+(0.04)(1.07)+(0.05)(1.15)]+[(0.20)(1.15)+(0.22)(0.38)+(0.25)(0.42)]+[(0.95)(0.68+0.31+0.19)]}{5.36\ AC}$$

$$= \frac{0.10+0.42+1.12}{5.36} = 0.31$$

$$T_v = (1''/12)\cdot R_v \cdot A \cdot 43{,}560$$

$$= (1/12)(0.31)(5.36\ ac)(43560\ sf/ac) = 6032\ cf$$

level 2 bioretention:

12" ponding depth : storage depth = 2.15'

$$SA = \frac{1.25 \cdot T_v}{storage} = \frac{1.25\ (6032\ cf)}{2.15\ ft} = 3507\ sf$$

Vanasse Hangen Brustlin, Inc.

VHB *Computations*

Project: Ferry Farm Project # 37912.07
Location: Sheet of
Calculated by: R. Clayton Date:
Checked by: Date:
Title BIORETENTION SIZING

Drainage Area B: Maintinance & Operations

Area = 2.90 AC

	D
forest	0.51
Turf	1.03
imp	1.36

coefficients:

D
0.05
0.25
0.95

$$R_v = \frac{(0.05)(0.51)+(0.25)(1.03)+(0.95)(1.36)}{2.90\ AC} = \frac{1.58}{2.90}$$

$$= 0.54$$

$$T_v = (1''/12)\ R_v \cdot A \cdot 43560$$

$$= (1/12)(0.54)(2.90)(43560) = 5685\ cf$$

level 2 bioretention

12" ponding depth : storage depth = 2.15'

$$SA = \frac{1.25 \cdot T_v}{storage} = \frac{(1.25)(5685\ cf)}{2.15\ ft} = 3305\ sf$$

Vanasse Hangen Brustlin, Inc.

Bioretention Sizing

N.T.S. Source: VHB

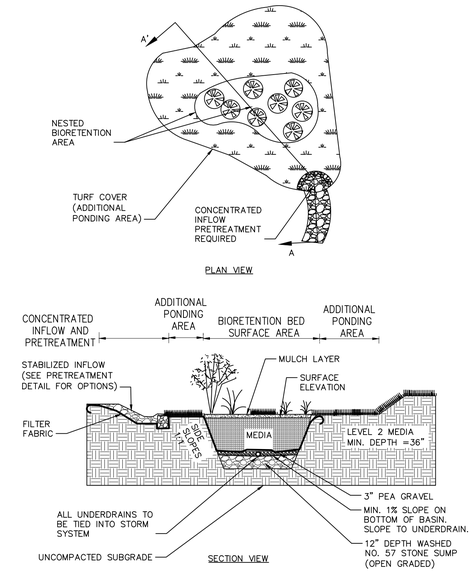

Bioretention with Additional Surface Ponding

3/11

N.T.S. Source: VA DEQ Stormwater Design Specification No. 9 Fig 9.5

Virginia Runoff Reduction Method Worksheet

Virginia Runoff Reduction Method New Development Worksheet -- v2.7 Revised April 2013

Site Data Summary

Total Rainfall = 43 inches

Site Land Cover Summary

	A Soils	B Soils	C Soils	D Soils	Total	% of Total
Forest (acres)	3.01	1.79	1.68	17.96	24.44	*40.82*
Turf (acres)	2.29	8.06	0.94	18.27	29.56	*49.37*
Impervious (acres)	0.25	1.76	0.44	3.42	5.87	*9.80*
					59.87	*100.00*

Site Rv	0.22
Post Development Treatment Volume (ft3)	48589
Post Development TP Load (lb/yr)	30.53
Post Development TN Load (lb/yr)	218.40
Total TP Load Reduction Required (lb/yr)	5.98

Total Runoff Volume Reduction (ft^3)	8974
Total TP Load Reduction Achieved (lb/yr)	0
Total TN Load Reduction Achieved (lb/yr)	50.34
Adjusted Post Development TP Load (lb/yr)	24.19
Remaining Phosphorous Load Reduction (Lb/yr) Required	0.00

Drainage Area Summary

	D.A. A	D.A. B	D.A. C	D.A. D	D.A. E	Total
Forest (acres)	2.23	0.51	0.00	0.00	0.00	*2.74*
Turf (acres)	1.95	1.03	0.00	0.00	0.00	*2.98*
Impervious (acrres)	1.18	1.36	0.00	0.00	0.00	*2.54*
						8.26

Drainage Area Compliance Summary

	D.A. A	D.A. B	D.A. C	D.A. D	D.A. E	Total
TP Load Red. (lb/yr)	3.16	3.18	0.00	0.00	0.00	*6.33*
TN Load Red. (lb/yr)	25.09	25.25	0.00	0.00	0.00	*50.34*

Channel and Flood Protection

	Weighted CN	1-year storm Adjusted CN	2-year storm Adjusted CN	10-year storm Adjusted CN
Target Rainfall Event (in)		2.90	3.50	5.50
D.A. A CN	77	72	73	74
D.A. B CN	88	82	83	84
D.A. C CN	0	#N/A	#N/A	#N/A
D.A. D CN	0	#N/A	#N/A	#N/A
D.A. E CN	0	#N/A	#N/A	#N/A

Drainage Area A Summary

Land Cover Summary

	A Soils	B Soils	C Soils	D Soils	Total	% of Total
Forest (acres)	0.00	0.01	1.07	1.15	2.23	*41.57*
Turf (acres)	0.00	1.15	0.38	0.42	1.95	*36.40*
Impervious (acres)	0.00	0.68	0.31	0.19	1.18	*22.03*
					5.36	

BMP Selections

Practice	Credit Area (acres)		Downstream Practice
6.b. Bioretention #2 (Spec #9)	**Impervious:**	**1.18**	**None**
	Turf (Pervious):	**1.95**	

Total Impervious Cover Treated (acres)	1.18
Total Turf Area Treated (acres)	1.95
Total TP Load Reduction Achieved in D.A. A (lb/yr)	3.16
Total TN Load Reduction Achieved in D.A. A (lb/yr)	25.09

Drainage Area B Summary

Land Cover Summary

	A Soils	B Soils	C Soils	D Soils	Total	% of Total
Forest (acres)	0.00	0.00	0.00	0.51	0.51	*9.57*
Turf (acres)	0.00	0.00	0.00	1.03	1.03	*19.23*
Impervious (acres)	0.00	0.00	0.00	1.36	1.36	*25.39*
					2.90	

BMP Selections

Practice	Credit Area (acres)		Downstream Practice
6.b. Bioretention #2 (Spec #9)	**Impervious:**	**1.36**	
	Turf (Pervious):	**1.03**	

Total Impervious Cover Treated (acres)	1.36
Total Turf Area Treated (acres)	1.03
Total TP Load Reduction Achieved in D.A. A (lb/yr)	3.18
Total TN Load Reduction Achieved in D.A. A (lb/yr)	25.25

Runoff Reduction Method Summary

N.T.S. Source: VHB

QUINN EVANS ARCHITECTS
2121 WARD PLACE, NW
FOURTH FLOOR
WASHINGTON, DC 20036
v 202 298 6700
f 202 298 6666
WWW.QUINNEVANS.COM

vhb
115 SOUTH 15TH STREET
SUITE 200
RICHMOND, VIRGINIA 23219
804.343.7100 | FAX 804.343.1713

FERRY FARM PHASE 1 IMPROVEMENTS

268 Kings Hwy,
Fredericksburg, VA
22405

QEA # 31402900

Calculations

COMMONWEALTH OF VIRGINIA
JOHN P. CARTY
Lic. No. 039452
12/19/14
PROFESSIONAL ENGINEER

SITE PERMIT SUBMISSION
12/19/14

REVISIONS

NO.	DESCRIPTION	DATE

C-902

12/19/2014 5:09:41 PM \\RICHVAVPROJECTS\37912.07 QEA FERRY FARM PHASE 1\CADD\ZDPLA\NSE\T\37912.07-CALC

LD-269
Rev. 3-83

Project: Ferry Farm - Phase 1 | Plan Sheet No. ____ | Designer: R. Clayton | Date: 12/16/2014 | Rev. Date ____ | Sheet ____ of ____

STATION:

HYDROLOGICAL DATA: D.A.= 0.74 AC.

STM 1

imp = 0.23 AC
turf = 0.10 AC
forest = 0
C = 0.73

T_c = 5 min
i_2 = 5.09
i_{10} = 6.91

i_2: B = 65.52, D = 13.25, E = 0.88
i_{10}: B = 49.92, D = 10.00, E = 0.73

AHW Controls
100 yr. Flood plain ____ elev. ____
Design AHW depth ____ elev. ____
Structures ____ elev. ____
freq. ____ TWelev. ____

Shoulder elev. 76.6 | CL elev. 77.0 | 77.3 | Skew ____ Cover ____ ft.

DISCHARGES USED
Q 2 = 1.26 CFS
Q 10 = 1.72 CFS

RISK ASSESSMENT
ADT ____
Detours Available ____ Length ____
Overtopping Stage ____
Flood Plain Management ____
Criteria and Significant Impact ____

Inv. El. 74.74 | Orig. Gr. Elev. ____ | So= 0.004 | L= 119 | Inv. El. 74.26 | Orig. Gr. Elev. ____

CULVERT TYPE & SIZE	Q	Q/B	HEADWATER COMPUTATIONS: INLET CONT. HW/D	HW	Ke	dc	OUTLET CONTROL (dc+D)/2	ho	H	LSo	HW ELEV.	CONT HW. C.M.	OUTLET VELOCITY C.M.	Smooth	End Treat.	COMMENTS
12" RCP	1.26	/	0.47	0.47	0.5	0.45	0.73	0.73	0.4	0.48	0.45	75.41				
12" RCP	1.72	/	0.81	0.81	0.5	0.47	0.74	0.81	0.43	0.48	0.70	75.55				inlet controls
15" RCP	1.72	/	0.59	0.74	0.5	0.55	0.9	0.9	0	0.48	0.42	75.48		3.18	EC-2	inlet controls

SUMMARY & RECOMMENDATIONS:
Design Flood Exceed. Prob. ____ Elev. ____
Overtop Flood Exceed. Prob. ____ Elev. ____
Base Flood 1% Exceed. Prob. ____ Elev. ____

LD-269
Rev. 3-83

Project: Ferry Farm - Phase 1 | Plan Sheet No. ____ | Designer: R. Clayton | Date: 12/16/2014 | Rev. Date ____ | Sheet ____ of ____

STATION:

HYDROLOGICAL DATA: D.A.= 2.95 AC.

STM 3

imp = 0.38 AC
turf = 0.56 AC
forest = 2.01 AC
C = 0.35

T_c = 27.2 min
i_2 = 2.53
i_{10} = 3.56

i_2: B = 65.52, D = 13.25, E = 0.88
i_{10}: B = 49.92, D = 10.00, E = 0.73

AHW Controls
100 yr. Flood plain ____ elev. ____
Design AHW depth ____ elev. ____
Structures ____ elev. ____
freq. ____ TWelev. ____

Shoulder elev. 69.8 | CL elev. 69.8 | 70.0 | Skew ____ Cover ____ ft.

DISCHARGES USED
Q 2 = 2.61 CFS
Q 10 = 3.68 CFS

RISK ASSESSMENT
ADT ____
Detours Available ____ Length ____
Overtopping Stage ____
Flood Plain Management ____
Criteria and Significant Impact ____

Inv. El. 68.13 | Orig. Gr. Elev. ____ | So= 0.04 | L= 35.7 | Inv. El. 66.7 | Orig. Gr. Elev. ____

CULVERT TYPE & SIZE	Q	Q/B	HEADWATER COMPUTATIONS: INLET CONT. HW/D	HW	Ke	dc	OUTLET CONTROL (dc+D)/2	ho	H	LSo	HW ELEV.	CONT HW. C.M.	OUTLET VELOCITY C.M.	Smooth	End Treat.	COMMENTS
12" RCP	2.61	/	1.1	1.1	0.5	0.45	0.83	1.1	0.45	1.43	0.12	69.2				inlet controls
12" RCP	3.68	/	1.45	1.45	0.5	0.8	0.9	1.45	0.8	1.43	0.82	69.6		9.15	EC-1	
15" RCP	3.68	/	0.95	1.19	0.5	0.8	1.03	1.19	0.3	1.43	0.04	69.3		9.07		inlet controls

SUMMARY & RECOMMENDATIONS:
Design Flood Exceed. Prob. ____ Elev. ____
Overtop Flood Exceed. Prob. ____ Elev. ____
Base Flood 1% Exceed. Prob. ____ Elev. ____

LD-269
Rev. 3-83

Project: Ferry Farm - Phase 1 | Plan Sheet No. ____ | Designer: R. Clayton | Date: 12/16/2014 | Rev. Date ____ | Sheet ____ of ____

STATION:

HYDROLOGICAL DATA: D.A.= 2.8 AC.

STM 31

imp = 0.11 AC
turf = 0.57 AC
forest = 2.12 AC
C = 0.30

T_c = 71.3 min
i_2 = 1.32
i_{10} = 2.01

i_2: B = 65.52, D = 13.25, E = 0.88
i_{10}: B = 49.92, D = 10.00, E = 0.73

AHW Controls
100 yr. Flood plain ____ elev. ____
Design AHW depth ____ elev. ____
Structures ____ elev. ____
freq. ____ TWelev. ____

Shoulder elev. 59.3 | CL elev. 59.0 | 58.50 | Skew ____ Cover ____ ft.

DISCHARGES USED
Q 2 = 1.11 CFS
Q 10 = 1.69 CFS

RISK ASSESSMENT
ADT ____
Detours Available ____ Length ____
Overtopping Stage ____
Flood Plain Management ____
Criteria and Significant Impact ____

Inv. El. 54.85 | Orig. Gr. Elev. ____ | So= 0.0011 | L= 45.3 | Inv. El. 54.80 | Orig. Gr. Elev. ____

CULVERT TYPE & SIZE	Q	Q/B	HEADWATER COMPUTATIONS: INLET CONT. HW/D	HW	Ke	dc	OUTLET CONTROL (dc+D)/2	ho	H	LSo	HW ELEV.	CONT HW. C.M.	OUTLET VELOCITY C.M.	Smooth	End Treat.	COMMENTS
RCP																
15" RCP	1.69	/	0.59	0.74	0.5	0.45	0.83	0.83	0	0.05	0.78	55.6				inlet controls
24" RCP	1.69	/	0.3	0.4	0.5	0.25	1.13	1.13	0	0.05	1.08	55.9				outlet controls
30" RCP	1.69	/	0.2	0.5	0.5	0.15	1.33	1.33	0	0.05	1.28	56.1		1.89	EC-2	outlet controls

SUMMARY & RECOMMENDATIONS:
Design Flood Exceed. Prob. ____ Elev. ____
Overtop Flood Exceed. Prob. ____ Elev. ____
Base Flood 1% Exceed. Prob. ____ Elev. ____

LD-269
Rev. 3-83

Project: Ferry Farm - Phase 1 | Plan Sheet No. ____ | Designer: R. Clayton | Date: 12/16/2014 | Rev. Date ____ | Sheet ____ of ____

STATION:

HYDROLOGICAL DATA: D.A.= 2.6 AC.

STM 33

imp = 0.03 AC
turf = 0.73 AC
forest = 1.84 AC
C = 0.29

T_c = 47.8 min
i_2 = 1.87
i_{10} = 2.72

i_2: B = 65.52, D = 13.25, E = 0.88
i_{10}: B = 49.92, D = 10.00, E = 0.73

AHW Controls
100 yr. Flood plain ____ elev. ____
Design AHW depth ____ elev. ____
Structures ____ elev. ____
freq. ____ TWelev. ____

Shoulder elev. 70.3 | CL elev. 70.0 | 69.6 | Skew ____ Cover ____ ft.

DISCHARGES USED
Q 2 = 1.41 CFS
Q 10 = 2.05 CFS

RISK ASSESSMENT
ADT ____
Detours Available ____ Length ____
Overtopping Stage ____
Flood Plain Management ____
Criteria and Significant Impact ____

Inv. El. 55.45 | Orig. Gr. Elev. ____ | So= 0.0006 | L= 116 | Inv. El. 55.38 | Orig. Gr. Elev. ____

CULVERT TYPE & SIZE	Q	Q/B	HEADWATER COMPUTATIONS: INLET CONT. HW/D	HW	Ke	dc	OUTLET CONTROL (dc+D)/2	ho	H	LSo	HW ELEV.	CONT HW. C.M.	OUTLET VELOCITY C.M.	Smooth	End Treat.	COMMENTS
15" RCP	2.05	/	0.45	0.81	0.5	0.40	1.03	1.03	0	0.07	0.94	56.34				outlet controls
24" RCP	2.05	/	0.3	0.38	0.5	0.4	1.2	1.2	0	0.07	1.13	56.51				outlet controls
30" RCP	2.05	/	0	0	0.5	0.2	1.35	1.35	0	0.07	1.28	56.64		1.61	EC-2	outlet controls

SUMMARY & RECOMMENDATIONS:
Design Flood Exceed. Prob. ____ Elev. ____
Overtop Flood Exceed. Prob. ____ Elev. ____
Base Flood 1% Exceed. Prob. ____ Elev. ____

LD-269
Rev. 3-83

Project: Ferry Farm - Phase 1 | Plan Sheet No. ____ | Designer: R. Clayton | Date: 12/16/2014 | Rev. Date ____ | Sheet ____ of ____

STATION:

HYDROLOGICAL DATA: D.A.= 1.3 AC.

STM 21

imp = 0.42 AC
turf = 0.83 AC
forest = 0.01 AC
C = 0.54

T_c = 5 min
i_2 = 5.09
i_{10} = 6.91

i_2: B = 65.52, D = 13.25, E = 0.88
i_{10}: B = 49.92, D = 10.00, E = 0.73

AHW Controls
100 yr. Flood plain ____ elev. ____
Design AHW depth ____ elev. ____
Structures ____ elev. ____
freq. ____ TWelev. ____

Shoulder elev. 62.3 | CL elev. 62.5 | 62.8 | Skew ____ Cover ____ ft.

DISCHARGES USED
Q 2 = 3.57 CFS
Q 10 = 4.85 CFS

RISK ASSESSMENT
ADT ____
Detours Available ____ Length ____
Overtopping Stage ____
Flood Plain Management ____
Criteria and Significant Impact ____

Inv. El. 60.00 | Orig. Gr. Elev. ____ | So= 0.00 | L= 42 | Inv. El. 60.00 | Orig. Gr. Elev. ____

CULVERT TYPE & SIZE	Q	Q/B	HEADWATER COMPUTATIONS: INLET CONT. HW/D	HW	Ke	dc	OUTLET CONTROL (dc+D)/2	ho	H	LSo	HW ELEV.	CONT HW. C.M.	OUTLET VELOCITY C.M.	Smooth	End Treat.	COMMENTS
Dual 12" RCP	3.57	1.79	0.85	0.85	0.5	0.5	0.75	0.85	0.2	0	1.05	61.85				outlet controls
Dual 12" RCP	4.85	2.43	1.05	1.05	0.5	0.75	0.88	1.05	0.37	0	1.42	61.42				outlet controls
Dual 15" RCP	4.85	2.43	0.73	0.91	0.5	0.7	0.98	0.98	0	0	0.98	60.98				outlet controls
18" RCP	4.85	4.85	0.84	1.26	0.5	0.8	1.15	1.26	0.2	0	1.46	61.46		0	N/A	outlet controls
24" RCP	4.85	4.85	0.55	1.1	0.5	0.75	1.38	1.38	0	0	1.38	61.38				outlet controls

SUMMARY & RECOMMENDATIONS:
Design Flood Exceed. Prob. ____ Elev. ____
Overtop Flood Exceed. Prob. ____ Elev. ____
Base Flood 1% Exceed. Prob. ____ Elev. ____

LD-269
Rev. 3-83

Project: Ferry Farm - Phase 1 | Plan Sheet No. ____ | Designer: R. Clayton | Date: 12/16/2014 | Rev. Date ____ | Sheet ____ of ____

STATION:

HYDROLOGICAL DATA: D.A.= 0.19 AC.

STM 23

imp = 0.08 AC
turf = 0.11 AC
forest = 0
C = 0.57

T_c = 5 min
i_2 = 5.09
i_{10} = 6.91

i_2: B = 65.52, D = 13.25, E = 0.88
i_{10}: B = 49.92, D = 10.00, E = 0.73

AHW Controls
100 yr. Flood plain ____ elev. ____
Design AHW depth ____ elev. ____
Structures ____ elev. ____
freq. ____ TWelev. ____

Shoulder elev. 63.8 | CL elev. 63.75 | 63.65 | Skew ____ Cover ____ ft.

DISCHARGES USED
Q 2 = 0.55 CFS
Q 10 = 0.75 CFS

RISK ASSESSMENT
ADT ____
Detours Available ____ Length ____
Overtopping Stage ____
Flood Plain Management ____
Criteria and Significant Impact ____

Inv. El. 61.62 | Orig. Gr. Elev. ____ | So= 0.01 | L= 22 | Inv. El. 61.60 | Orig. Gr. Elev. ____

CULVERT TYPE & SIZE	Q	Q/B	HEADWATER COMPUTATIONS: INLET CONT. HW/D	HW	Ke	dc	OUTLET CONTROL (dc+D)/2	ho	H	LSo	HW ELEV.	CONT HW. C.M.	OUTLET VELOCITY C.M.	Smooth	End Treat.	COMMENTS
12" RCP																
12" RCP	0.75	/	0.55	0.55	0.5	0.45	0.73	0.73	0	0.32	0.51	62.2		3.59	EC-1	inlet controls
15" RCP	0.75	/	0.45	0.50	0.5	0.3	0.78	0.78	0	0.32	0.50	62.2		3.52		inlet controls

SUMMARY & RECOMMENDATIONS:
Design Flood Exceed. Prob. ____ Elev. ____
Overtop Flood Exceed. Prob. ____ Elev. ____
Base Flood 1% Exceed. Prob. ____ Elev. ____

LD-269
Rev. 3-83

Project: Ferry Farm - Phase 1 | Plan Sheet No. ____ | Designer: R. Clayton | Date: 12/16/2014 | Rev. Date ____ | Sheet ____ of ____

STATION:

HYDROLOGICAL DATA: D.A.= 0.20 AC.

STM 25

imp = 0.09 AC
turf = 0.11 AC
forest = 0
C = 0.61

T_c = 5 min
i_2 = 5.09
i_{10} = 6.91

i_2: B = 65.52, D = 13.25, E = 0.88
i_{10}: B = 49.92, D = 10.00, E = 0.73

AHW Controls
100 yr. Flood plain ____ elev. ____
Design AHW depth ____ elev. ____
Structures ____ elev. ____
freq. ____ TWelev. ____

Shoulder elev. 64.2 | CL elev. 64.3 | 64.4 | Skew ____ Cover ____ ft.

DISCHARGES USED
Q 2 = 0.62 CFS
Q 10 = 0.84 CFS

RISK ASSESSMENT
ADT ____
Detours Available ____ Length ____
Overtopping Stage ____
Flood Plain Management ____
Criteria and Significant Impact ____

Inv. El. 62.60 | Orig. Gr. Elev. ____ | So= 0.01 | L= 30 | Inv. El. 62.3 | Orig. Gr. Elev. ____

CULVERT TYPE & SIZE	Q	Q/B	HEADWATER COMPUTATIONS: INLET CONT. HW/D	HW	Ke	dc	OUTLET CONTROL (dc+D)/2	ho	H	LSo	HW ELEV.	CONT HW. C.M.	OUTLET VELOCITY C.M.	Smooth	End Treat.	COMMENTS
12" RCP	0.84	/	0.57	0.57	0.5	0.45	0.73	0.73	0	0.3	0.43	63.2		3.71	EC-1	inlet controls
15" RCP	0.84	/	0.45	0.54	0.5	0.35	0.8	0.8	0	0.3	0.5	63.2		3.63		inlet controls

SUMMARY & RECOMMENDATIONS:
Design Flood Exceed. Prob. ____ Elev. ____
Overtop Flood Exceed. Prob. ____ Elev. ____
Base Flood 1% Exceed. Prob. ____ Elev. ____

Culvert Calculations

N.T.S.

Source: VHB

QUINN EVANS ARCHITECTS
2121 WARD PLACE, NW
FOURTH FLOOR
WASHINGTON, DC 20036
v 202 298 6700
f 202 298 6666
WWW.QUINNEVANS.COM

vhb
115 SOUTH 15TH STREET
SUITE 200
RICHMOND, VIRGINIA 23219
804.343.7100 | FAX 804.343.1713

FERRY FARM PHASE 1 IMPROVEMENTS

268 Kings Hwy, Fredericksburg, VA 22405

QEA # 31402900

Calculations

COMMONWEALTH OF VIRGINIA
JOHN P. CARTY
Lic. No. 039452
12/19/14
PROFESSIONAL ENGINEER

SITE PERMIT SUBMISSION
12/19/14

REVISIONS

NO.	DESCRIPTION	DATE

C-903

12/30/2014 5:09:41 PM \\RICHNAS\PROJECTS\37910.07 QEA FERRY FARM PHASE 1\CAD\LDP\LANSE\137910.07-CALC

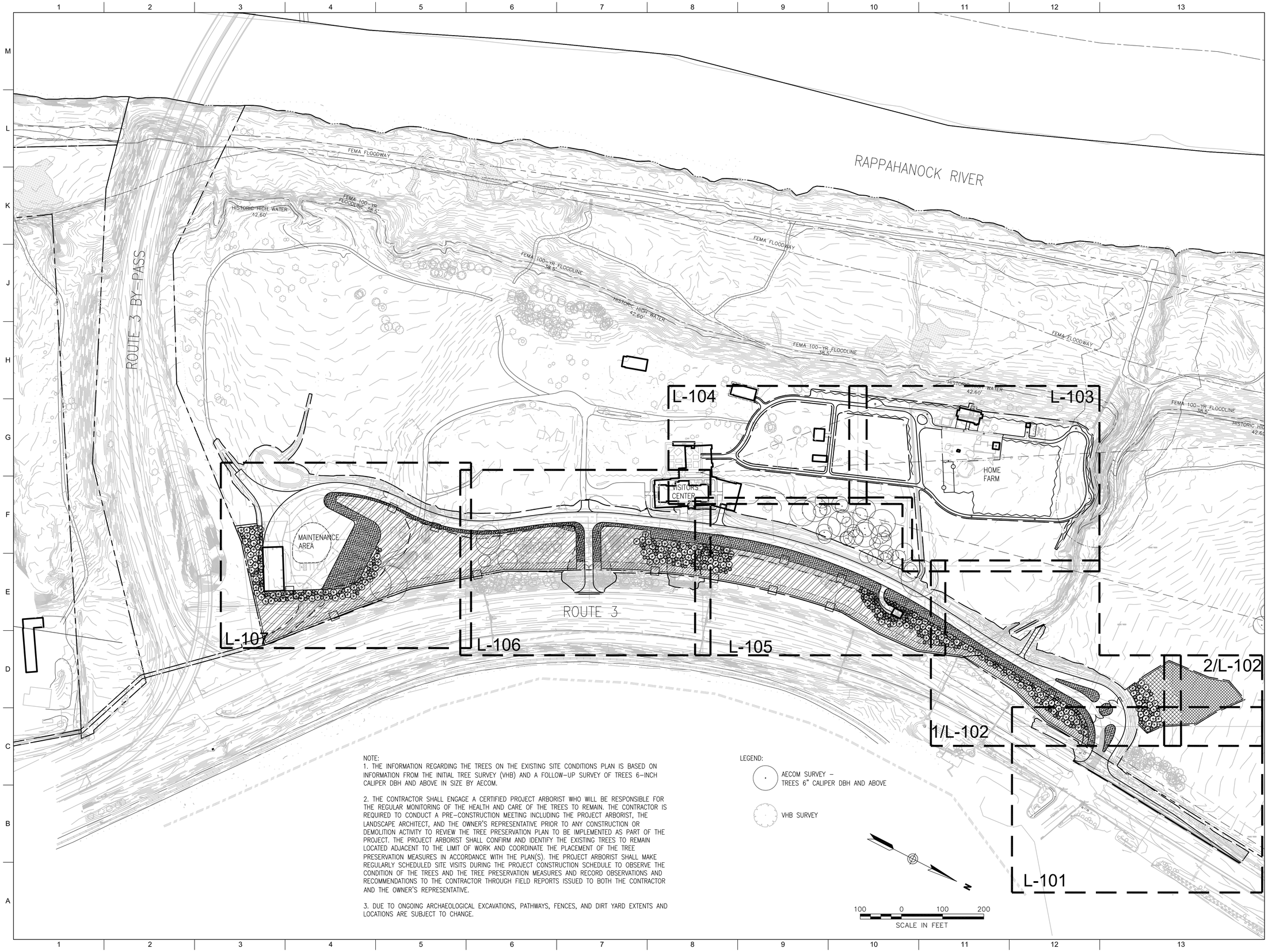

NOTE:

1. THE INFORMATION REGARDING THE TREES ON THE EXISTING SITE CONDITIONS PLAN IS BASED ON INFORMATION FROM THE INITIAL TREE SURVEY (VHB) AND A FOLLOW-UP SURVEY OF TREES 6-INCH CALIPER DBH AND ABOVE IN SIZE BY AECOM.

2. THE CONTRACTOR SHALL ENGAGE A CERTIFIED PROJECT ARBORIST WHO WILL BE RESPONSIBLE FOR THE REGULAR MONITORING OF THE HEALTH AND CARE OF THE TREES TO REMAIN. THE CONTRACTOR IS REQUIRED TO CONDUCT A PRE-CONSTRUCTION MEETING INCLUDING THE PROJECT ARBORIST, THE LANDSCAPE ARCHITECT, AND THE OWNER'S REPRESENTATIVE PRIOR TO ANY CONSTRUCTION OR DEMOLITION ACTIVITY TO REVIEW THE TREE PRESERVATION PLAN TO BE IMPLEMENTED AS PART OF THE PROJECT. THE PROJECT ARBORIST SHALL CONFIRM AND IDENTIFY THE EXISTING TREES TO REMAIN LOCATED ADJACENT TO THE LIMIT OF WORK AND COORDINATE THE PLACEMENT OF THE TREE PRESERVATION MEASURES IN ACCORDANCE WITH THE PLAN(S). THE PROJECT ARBORIST SHALL MAKE REGULARLY SCHEDULED SITE VISITS DURING THE PROJECT CONSTRUCTION SCHEDULE TO OBSERVE THE CONDITION OF THE TREES AND THE TREE PRESERVATION MEASURES AND RECORD OBSERVATIONS AND RECOMMENDATIONS TO THE CONTRACTOR THROUGH FIELD REPORTS ISSUED TO BOTH THE CONTRACTOR AND THE OWNER'S REPRESENTATIVE.

3. DUE TO ONGOING ARCHAEOLOGICAL EXCAVATIONS, PATHWAYS, FENCES, AND DIRT YARD EXTENTS AND LOCATIONS ARE SUBJECT TO CHANGE.

LEGEND:

AECOM SURVEY – TREES 6" CALIPER DBH AND ABOVE

VHB SURVEY

QUINN EVANS ARCHITECTS

2121 WARD PLACE, NW
FOURTH FLOOR
WASHINGTON, DC 20007

v 202 298 6700
f 202 298 6666

WWW.QUINNEVANS.COM

AECOM

3101 WILSON BOULEVARD
SUITE 900
ARLINGTON, VA 22201

TEL. 703 682 4900
FAX. 703 682 4901

FERRY FARM PHASE 1 IMPROVEMENTS

268 Kings Hwy, Fredericksburg, VA 22405

QEA # #31402900

Overall Landscape Plan

COMMONWEALTH OF VIRGINIA
ROGER GUY COURTENAY
LANDSCAPE ARCHITECT

SITE PERMIT SUBMISSION
12/19/14

REVISIONS

NO.	DESCRIPTION	DATE

NOT FOR CONSTRUCTION

L-001

12/9/2014 4:09:47 PM F:\PROJECTS\2014\31402900 Ferry Farm Phase I Improvements\04_Drawings\Revit\MAO Buildings.rvt

MATCHLINE - SEE SHEET 1/L-102

MATCHLINE - SEE SHEET 2/L-102

GROUNDCOVERS AND SHRUBS AT UTILITY EASEMENT

GROUNDCOVERS, SHRUBS, UNDERSTORY EVERGREEN, AND SHADE TREES INTERPLANTED WITH EXISTING TREES TO REMAIN

PLANTING DISTRIBUTION "A" (1 / LP-301)

DEER FENCE (1 / L-504)

LAWN

15'-11"

EBOX

PROPERTY LINE, TYP.

LIMIT OF WORK, TYP.

KINGS HIGHWAY / ROUTE 3 WESTBOUND

KINGS HIGHWAY / ROUTE 3 EASTBOUND

FERRY ROAD

SIGN

DENSE TREES

DEER FENCE (1 / L-504)

PLANTING DISTRIBUTION "A" (1 / LP-301)

SHADE AND EVERGREEN TREE REFORESTATION INFILL OF EXPOSED WIND-BLOW AREA

EXISTING TREES TO BE EVALUATED BY PROJECT ARBORIST AS TO THE POTENTIAL TO REMAIN

20 0 20 40

SCALE IN FEET

QUINN EVANS ARCHITECTS

2121 WARD PLACE, NW
FOURTH FLOOR
WASHINGTON, DC 20007

v 202 298 6700
f 202 298 6666

WWW.QUINNEVANS.COM

AECOM

3101 WILSON BOULEVARD
SUITE 900
ARLINGTON, VA 22201

TEL. 703 682 4900
FAX. 703 682 4901

FERRY FARM PHASE 1 IMPROVEMENTS

268 Kings Hwy, Fredericksburg, VA 22405

QEA # #31402900

Landscape Plan

COMMONWEALTH OF VIRGINIA
ROGER GUY COURTENAY
9/10/10
LANDSCAPE ARCHITECT

SITE PERMIT SUBMISSION
12/19/14

REVISIONS

NO.	DESCRIPTION	DATE

NOT FOR CONSTRUCTION

L-101

12/9/2014 4:09:47 PM F:\PROJECTS\2014\31402900 Ferry Farm Phase 1 Improvements\04_Drawing\Revit\MAD Buildings.rvt

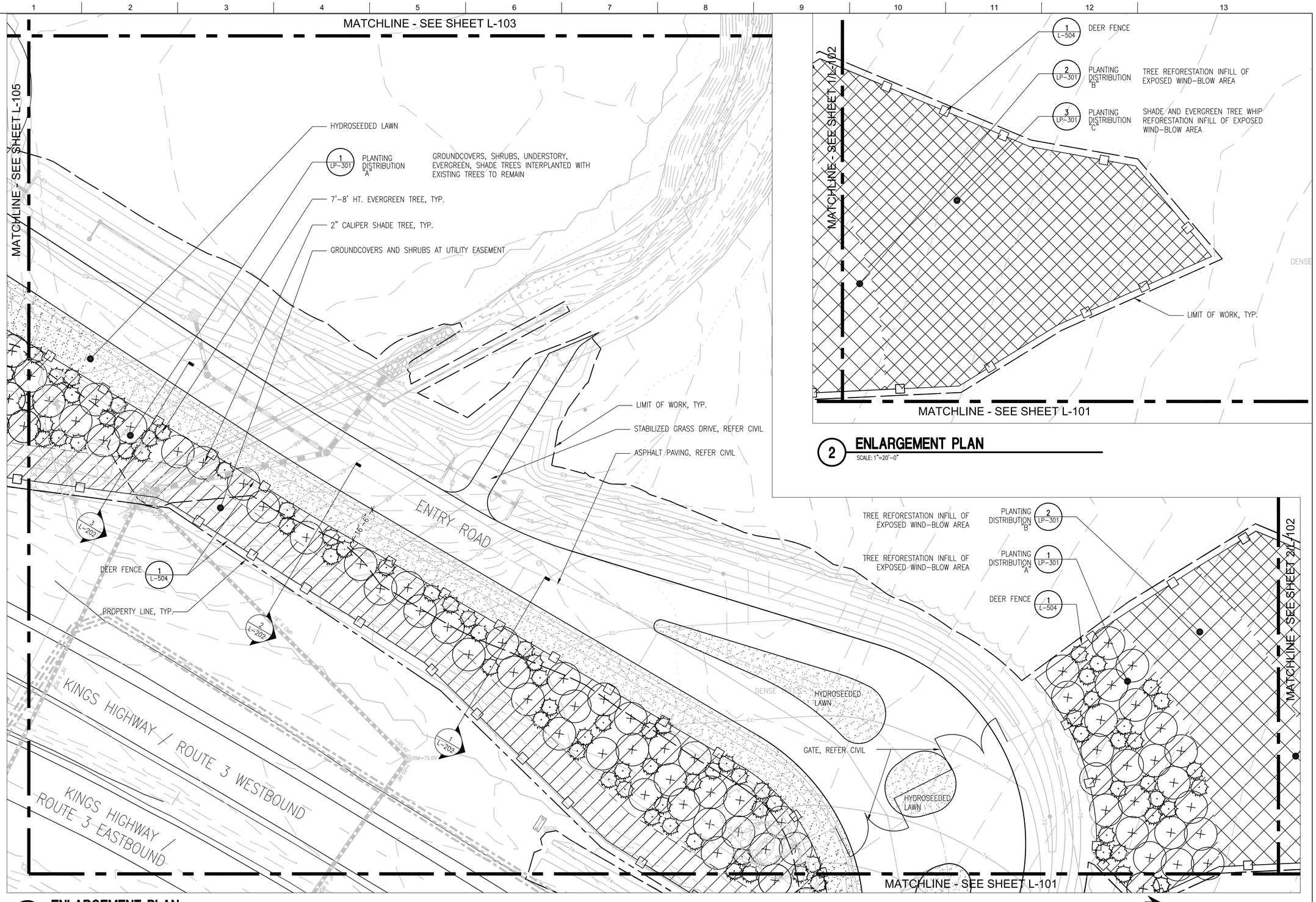

2 ENLARGEMENT PLAN
SCALE: 1"=20'-0"

1 ENLARGEMENT PLAN
SCALE: 1"=20'-0"

QUINN EVANS ARCHITECTS

2121 WARD PLACE, NW
FOURTH FLOOR
WASHINGTON, DC 20007

v 202 298 6700
f 202 298 6666

WWW.QUINNEVANS.COM

AECOM

3101 WILSON BOULEVARD
SUITE 900
ARLINGTON, VA 22201

TEL. 703 682 4900
FAX. 703 682 4901

FERRY FARM PHASE 1 IMPROVEMENTS

268 Kings Hwy, Fredericksburg, VA 22405

QEA # #31402900

Landscape Plan

COMMONWEALTH OF VIRGINIA
ROGER GUY COURTENAY
0/10470
LANDSCAPE ARCHITECT

SITE PERMIT SUBMISSION
12/19/14

REVISIONS

NO.	DESCRIPTION	DATE

NOT FOR CONSTRUCTION

L-102

12/9/2014 4:09:47 PM F:\PROJECTS\2014\31402900 Ferry Farm Phase I Improvements\04_Drawings\Revit\NAD Buildings.rvt

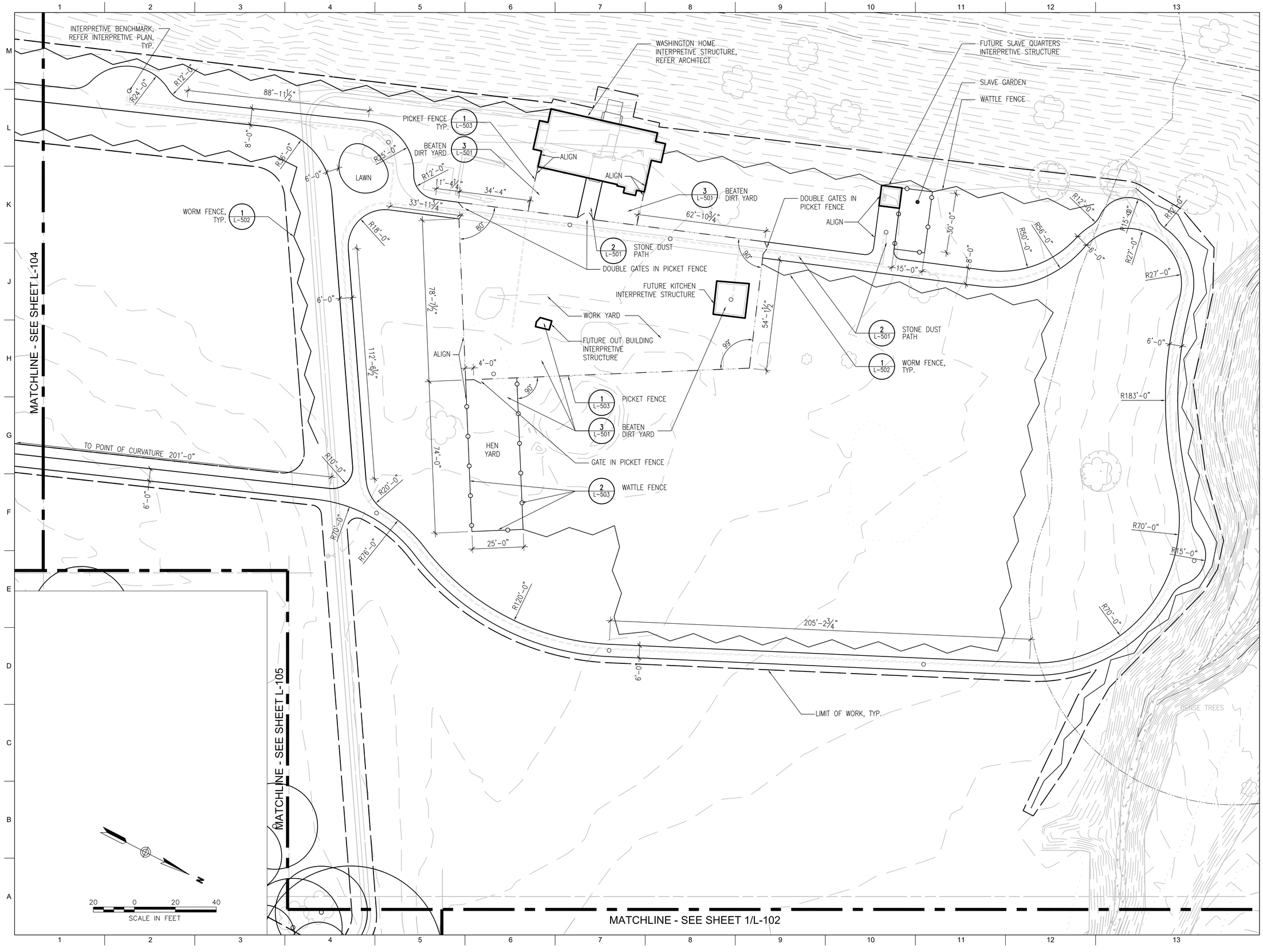

QUINN EVANS ARCHITECTS

2121 WARD PLACE, NW
FOURTH FLOOR
WASHINGTON, DC 20007

v 202 298 6700
f 202 298 6666

WWW.QUINNEVANS.COM

AECOM

3101 WILSON BOULEVARD
SUITE 900
ARLINGTON, VA 22201

TEL. 703 682 4900
FAX. 703 682 4901

FERRY FARM PHASE 1 IMPROVEMENTS

268 Kings Hwy, Fredericksburg, VA 22405

QEA # #31402900

Landscape Plan

COMMONWEALTH OF VIRGINIA
ROGER CLIFF COURTENAY
070470
LANDSCAPE ARCHITECT

SITE PERMIT SUBMISSION
12/19/14

REVISIONS

NO.	DESCRIPTION	DATE

NOT FOR CONSTRUCTION

L-103

12/9/2014 4:09:47 PM F:\PROJECTS\2014\31402900 Ferry Farm Phase I Improvements\04_Drawings\Revit\MEP Buildings.rvt

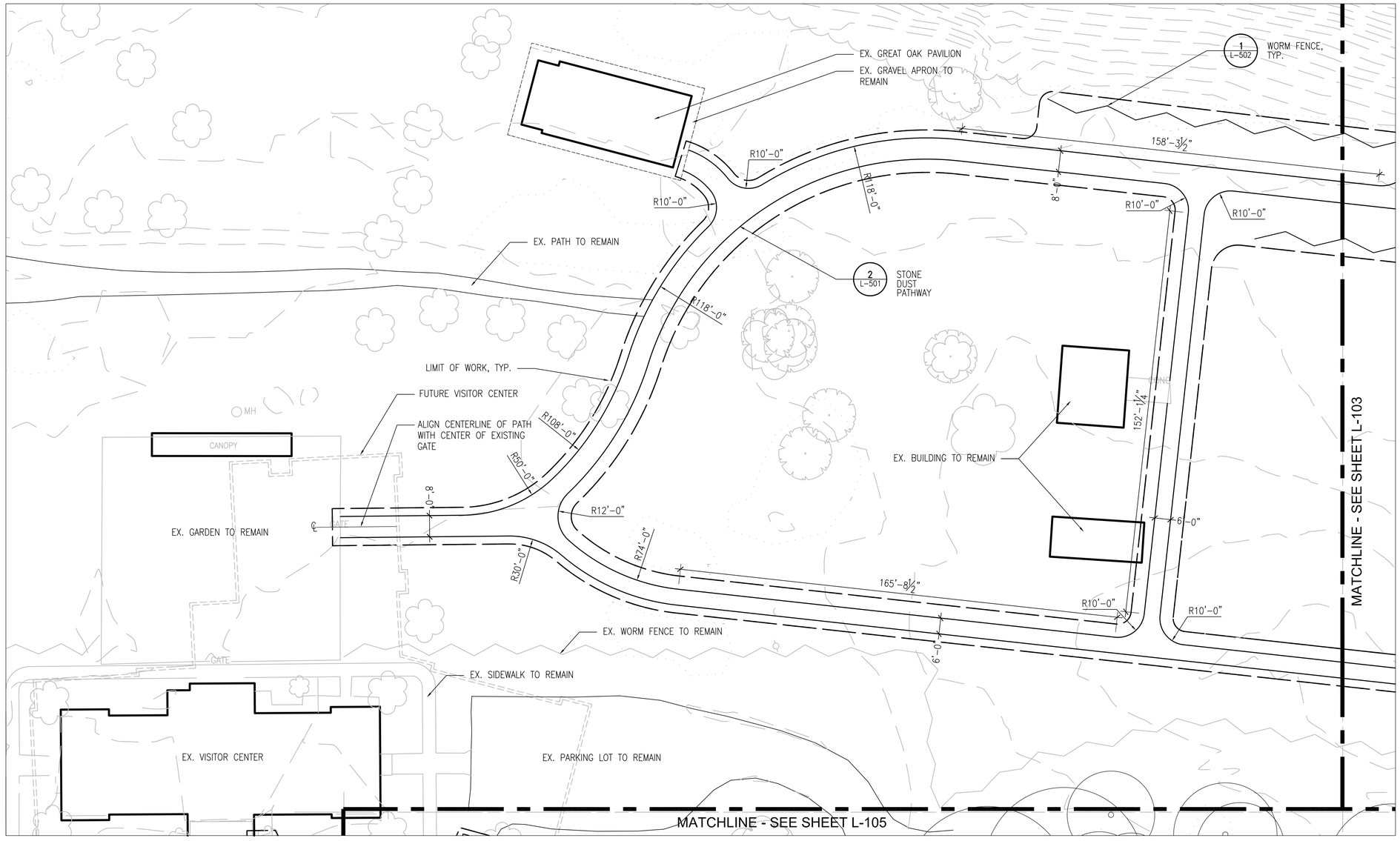

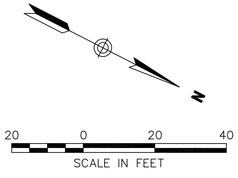

QUINN EVANS ARCHITECTS

2121 WARD PLACE, NW
FOURTH FLOOR
WASHINGTON, DC 20007

v 202 298 6700
f 202 298 6666

WWW.QUINNEVANS.COM

AECOM

3101 WILSON BOULEVARD
SUITE 900
ARLINGTON, VA 22201

TEL. 703 682 4900
FAX. 703 682 4901

FERRY FARM PHASE 1 IMPROVEMENTS

268 Kings Hwy, Fredericksburg, VA 22405

QEA # #31402900

Landscape Plan

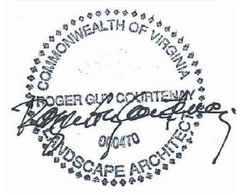

SITE PERMIT SUBMISSION
12/19/14

REVISIONS

NO.	DESCRIPTION	DATE

NOT FOR CONSTRUCTION

L-104

12/9/2014 4:09:47 PM F:\PROJECTS\2014\31402900 Ferry Farm Phase 1 Improvements\04_Drawings\Revit\MEO Buildings.rvt

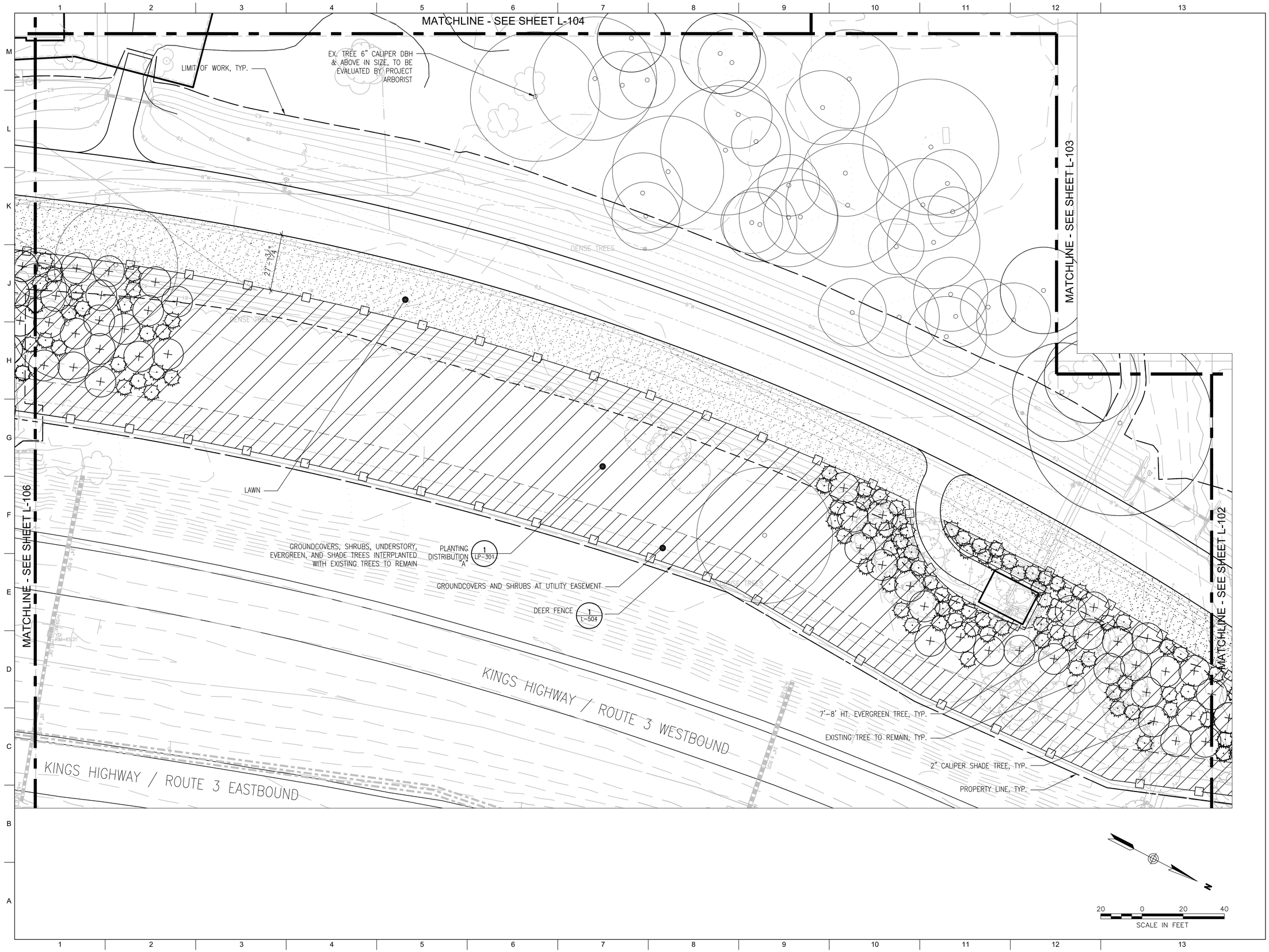

QUINN EVANS ARCHITECTS

2121 WARD PLACE, NW
FOURTH FLOOR
WASHINGTON, DC 20007

v 202 298 6700
f 202 298 6666

WWW.QUINNEVANS.COM

AECOM

3101 WILSON BOULEVARD
SUITE 900
ARLINGTON, VA 22201

TEL. 703 682 4900
FAX. 703 682 4901

FERRY FARM PHASE 1 IMPROVEMENTS

268 Kings Hwy, Fredericksburg, VA 22405

QEA # #31402900

Landscape Plan

COMMONWEALTH OF VIRGINIA
ROGER GUY COURTENAY
070470
LANDSCAPE ARCHITECT

SITE PERMIT SUBMISSION
12/19/14

REVISIONS

NO.	DESCRIPTION	DATE

NOT FOR CONSTRUCTION

L-105

12/30/2014 4:09:47 PM F:\PROJECTS\2014\34402900 Ferry Farm Phase 1 Improvements\04_Drawings\Revit\MAC\ Buildings.rvt

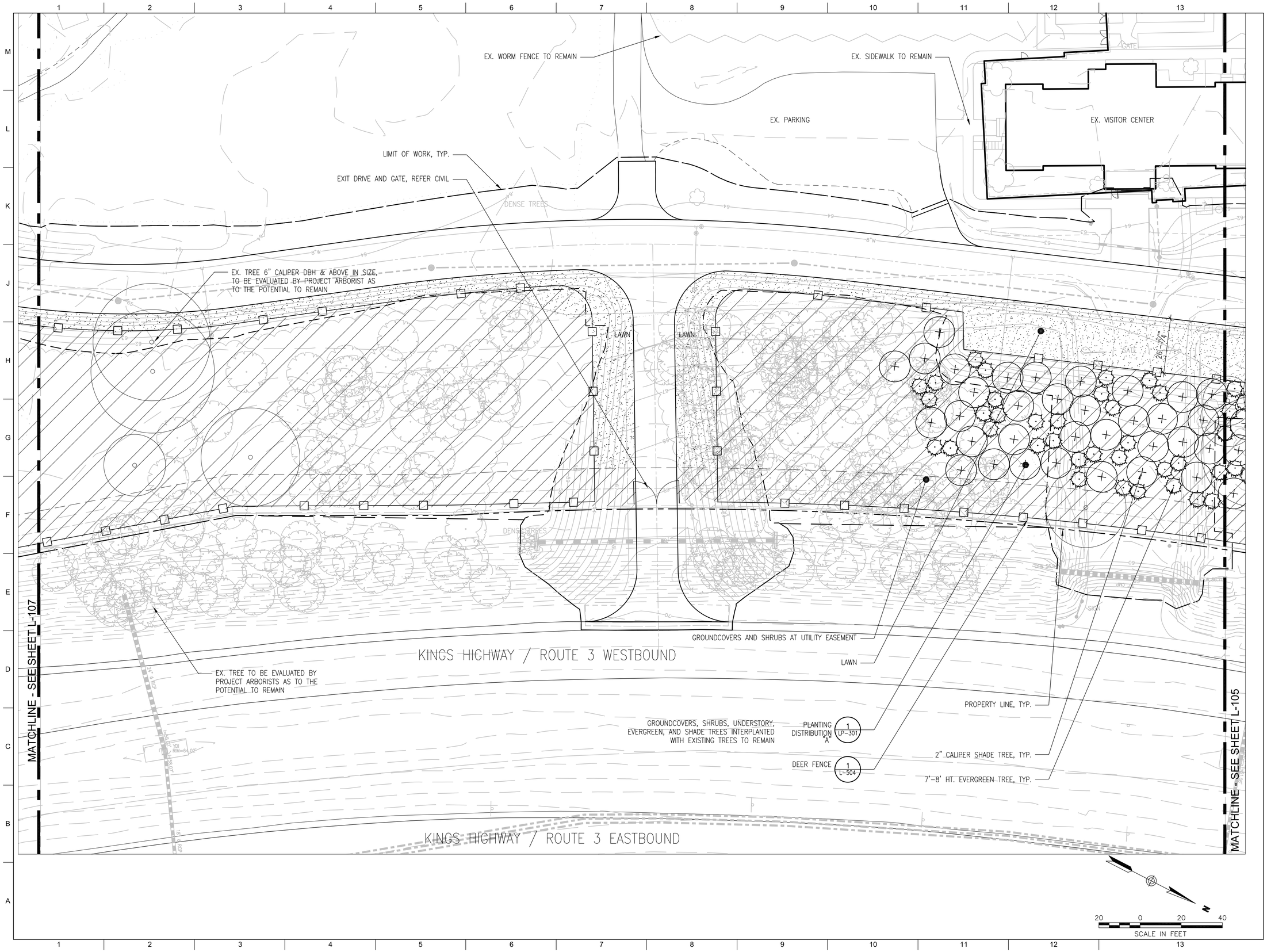

QUINN EVANS
ARCHITECTS

2121 WARD PLACE, NW
FOURTH FLOOR
WASHINGTON, DC 20007

v 202 298 6700
f 202 298 6666

WWW.QUINNEVANS.COM

AECOM

3101 WILSON BOULEVARD
SUITE 900
ARLINGTON, VA 22201

TEL. 703 682 4900
FAX. 703 682 4901

FERRY FARM PHASE 1 IMPROVEMENTS

268 Kings Hwy, Fredericksburg, VA 22405

QEA # #31402900

Landscape Plan

COMMONWEALTH OF VIRGINIA
ROGER GUY COURTENAY
LANDSCAPE ARCHITECT

SITE PERMIT SUBMISSION
12/19/14

REVISIONS

NO.	DESCRIPTION	DATE

NOT FOR CONSTRUCTION

L-106

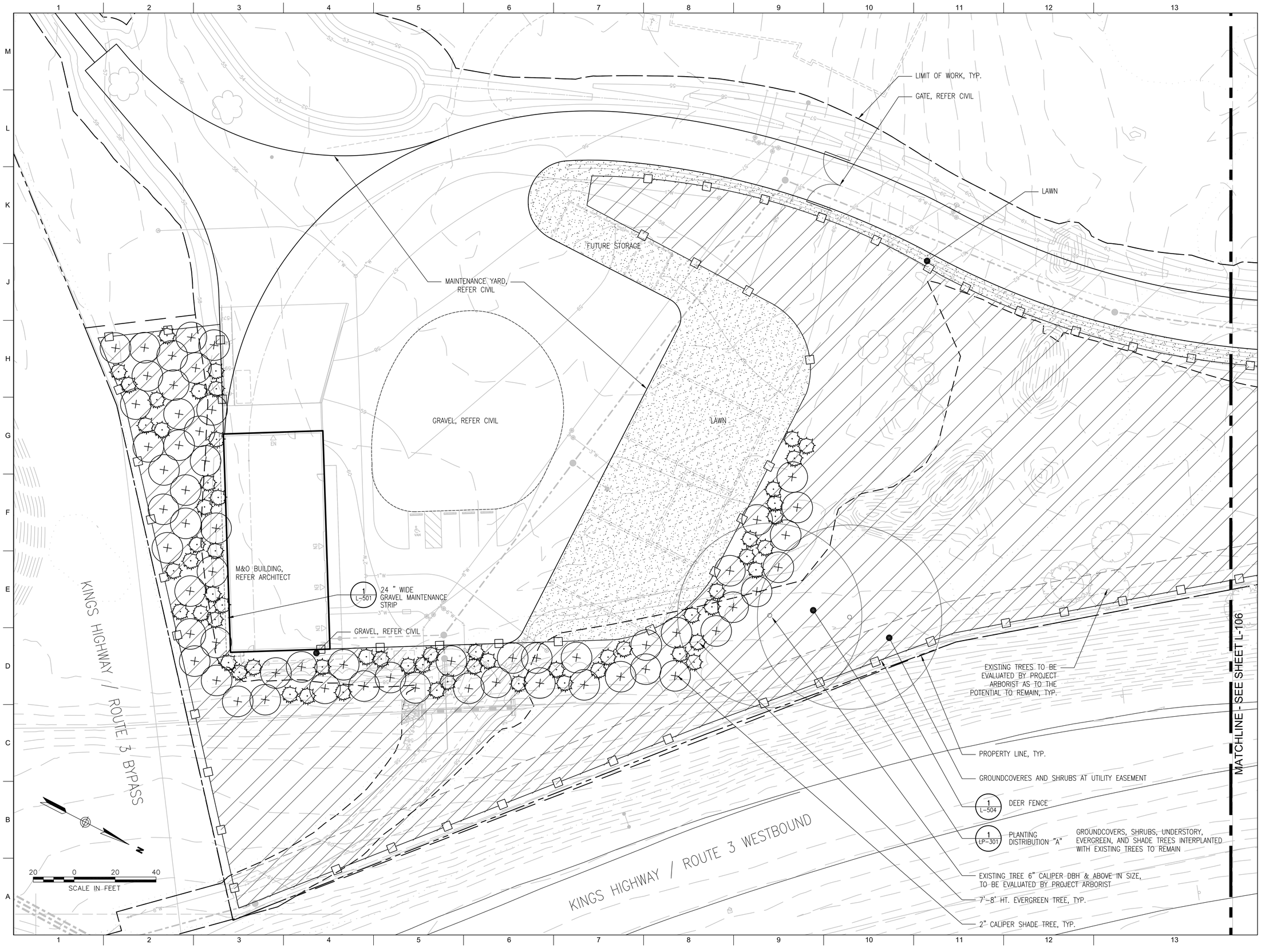

QUINN EVANS ARCHITECTS

2121 WARD PLACE, NW
FOURTH FLOOR
WASHINGTON, DC 20007

v 202 298 6700
f 202 298 6666

WWW.QUINNEVANS.COM

AECOM

3101 WILSON BOULEVARD
SUITE 900
ARLINGTON, VA 22201

TEL. 703 682 4900
FAX. 703 682 4901

FERRY FARM PHASE 1 IMPROVEMENTS

268 Kings Hwy, Fredericksburg, VA 22405

QEA # #31402900

Landscape Plan

COMMONWEALTH OF VIRGINIA
ROGER GUY COURTENAY
LANDSCAPE ARCHITECT

SITE PERMIT SUBMISSION
12/19/14

REVISIONS

NO.	DESCRIPTION	DATE

NOT FOR CONSTRUCTION

L-107

QUINN EVANS ARCHITECTS

2121 WARD PLACE, NW
FOURTH FLOOR
WASHINGTON, DC 20007

v 202 298 6700
f 202 298 6666

WWW.QUINNEVANS.COM

AECOM

3101 WILSON BOULEVARD
SUITE 900
ARLINGTON, VA 22201

TEL. 703 682 4900
FAX. 703 682 4901

FERRY FARM PHASE 1 IMPROVEMENTS

268 Kings Hwy, Fredericksburg, VA 22405

QEA # #31402900

Grading Plan

COMMONWEALTH OF VIRGINIA
ROGER GUY COURTENAY
LANDSCAPE ARCHITECT

SITE PERMIT SUBMISSION
12/19/14

REVISIONS

NO.	DESCRIPTION	DATE

NOT FOR CONSTRUCTION

L-201

12/9/2014 4:09:47 PM F:\PROJECTS\2014\31402900 Ferry Farm Phase I Improvements\04_Drawings\Revit\MAD Buildings.rvt

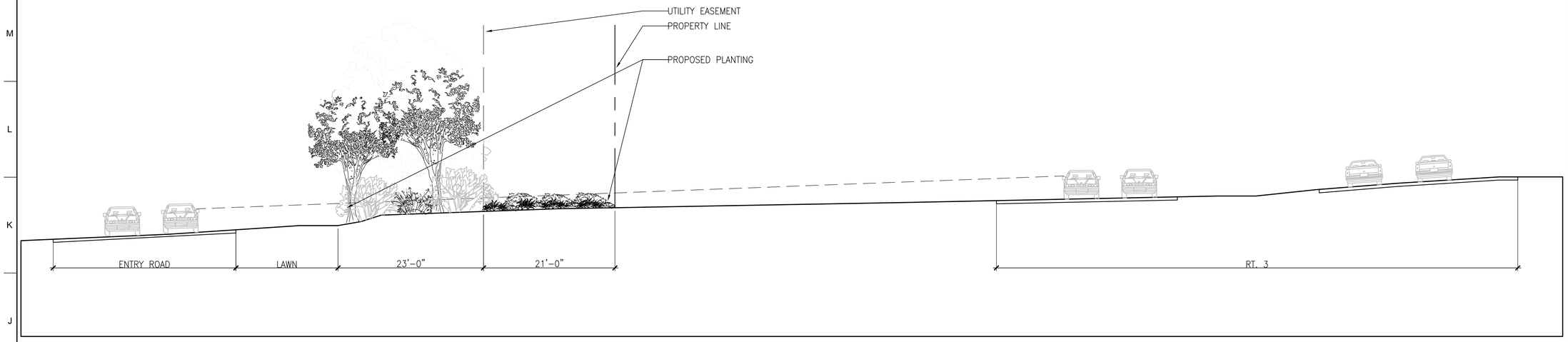

1 **BERM SECTION A - A'**
SCALE: 1/8" = 1'-0"

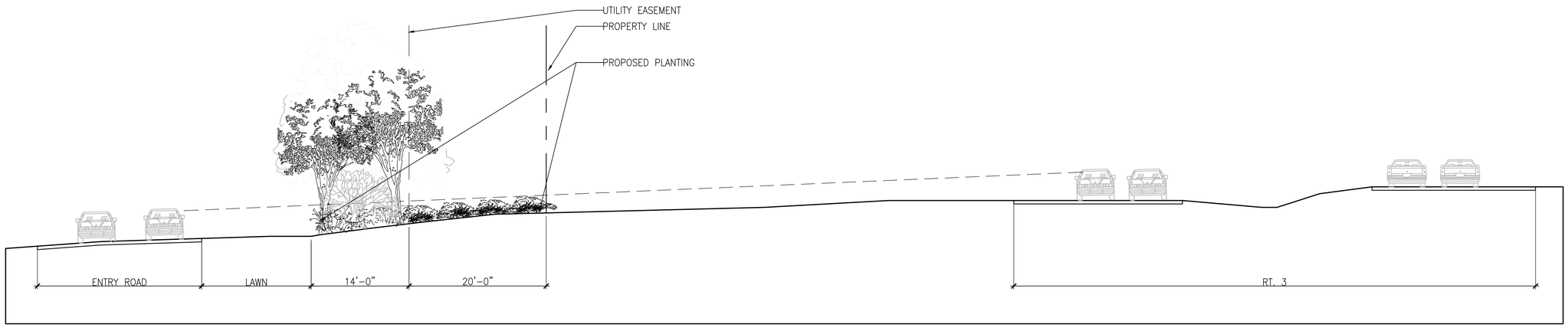

2 **BERM SECTION B - B'**
SCALE: 1/8" = 1'-0"

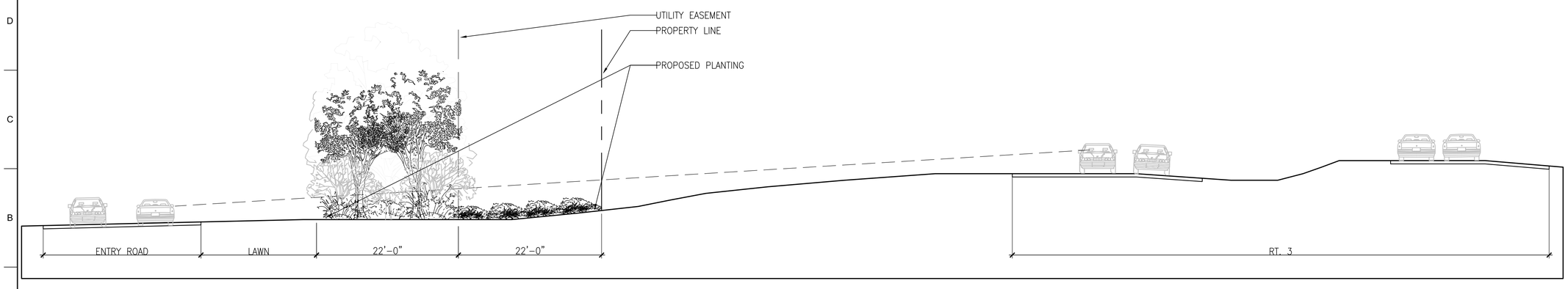

3 **BERM SECTION C - C'**
SCALE: 1/8" = 1'-0"

8 0 8 16
SCALE IN FEET

QUINN EVANS
ARCHITECTS

2121 WARD PLACE, NW
FOURTH FLOOR
WASHINGTON, DC 20007

v 202 298 6700
f 202 298 6666

WWW.QUINNEVANS.COM

AECOM

3101 WILSON BOULEVARD
SUITE 900
ARLINGTON, VA 22201

TEL. 703 682 4900
FAX. 703 682 4901

FERRY FARM PHASE 1 IMPROVEMENTS

268 Kings Hwy, Fredericksburg, VA 22405

QEA # #31402900

Site Sections

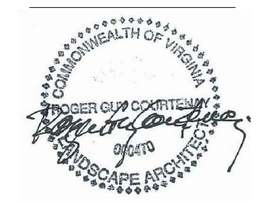

SITE PERMIT SUBMISSION
12/19/14

REVISIONS

NO.	DESCRIPTION	DATE

NOT FOR CONSTRUCTION

L-202

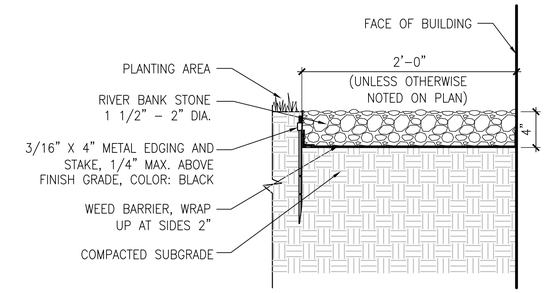

1 GRAVEL MAINTENANCE STRIP

SCALE: 1-1/2" = 1'-0" DT-PAVE-GRAVEL STRIP.dwg

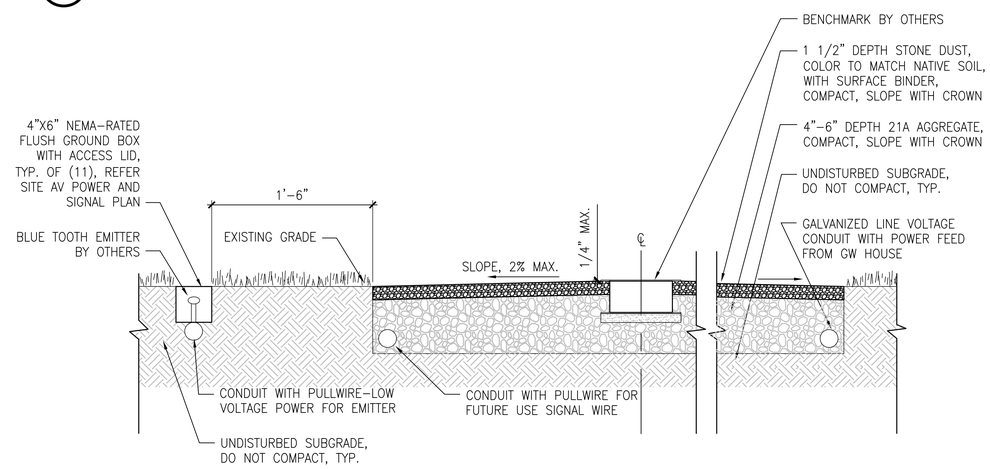

2 STONE DUST PATH

SCALE: 1 1/2" = 1'-0" DT-PAVE-PATH_STONE DUST.dwg

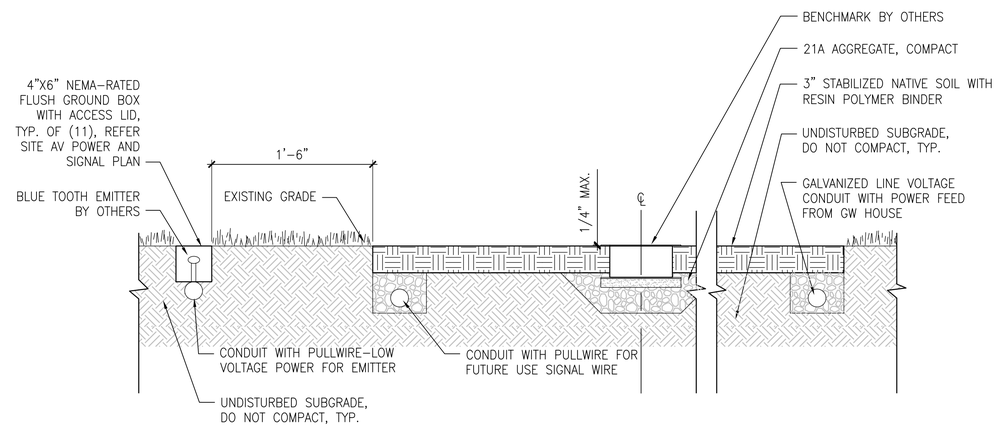

3 BEATEN DIRT YARD

SCALE: 1 1/2" = 1'-0" DT-PAVE-PATH_DIRT.dwg

QUINN EVANS ARCHITECTS

2121 WARD PLACE, NW
FOURTH FLOOR
WASHINGTON, DC 20007

v 202 298 6700
f 202 298 6666

WWW.QUINNEVANS.COM

AECOM

3101 WILSON BOULEVARD
SUITE 900
ARLINGTON, VA 22201

TEL. 703 682 4900
FAX. 703 682 4901

FERRY FARM PHASE 1 IMPROVEMENTS

268 Kings Hwy, Fredericksburg, VA 22405

QEA # #31402900

Site Details

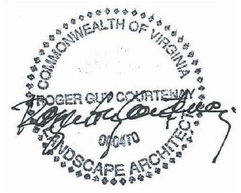

SITE PERMIT SUBMISSION
12/19/14

REVISIONS

NO.	DESCRIPTION	DATE

NOT FOR CONSTRUCTION

L-501

12/9/2014 4:09:47 PM F:\PROJECTS\2014\31402900 Ferry Farm Phase 1 Improvements\04_Drawings\Revit\MAD Buildings.rvt

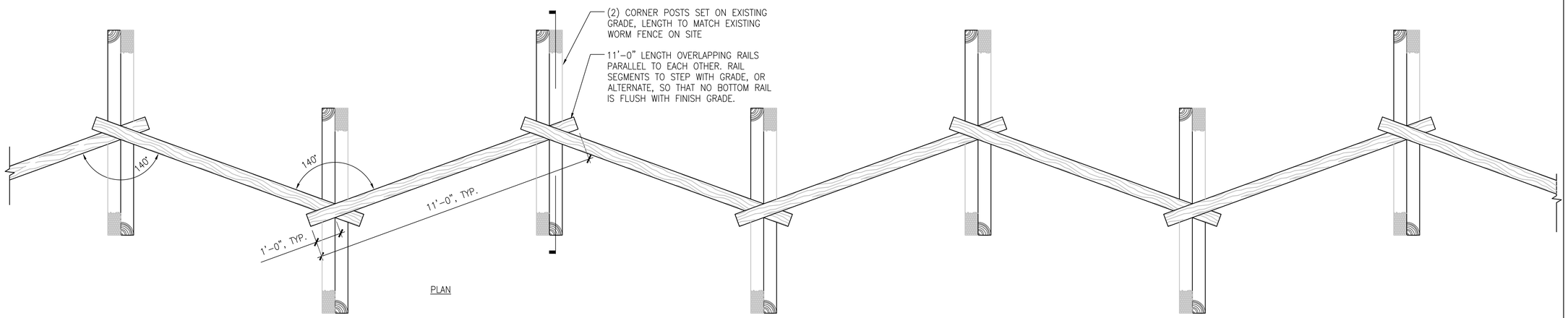

PLAN

PHOTOGRAPH OF EXAMPLE FENCE (N.T.S.)

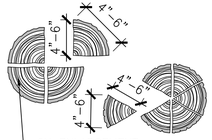

2X ENLARGEMENT

RAILS TO HAVE EQUAL PROPORTIONS OF 4" TO 6". REMOVE BARK, ALLOW TO WEATHER NATURALLY

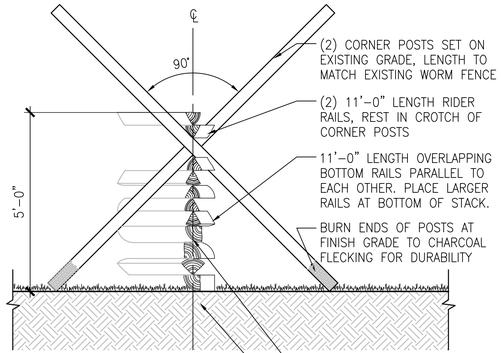

SECTION

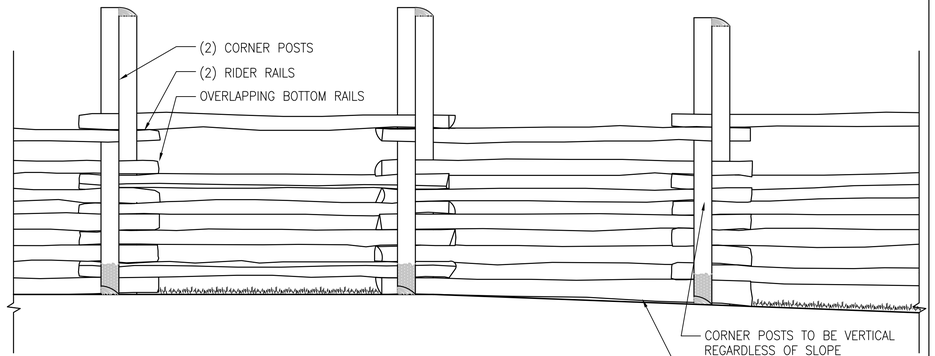

ELEVATION

1 WORM FENCE

SCALE: 1/2" = 1'-0"

DT-FENC-WORM.dwg

QUINN EVANS ARCHITECTS

2121 WARD PLACE, NW
FOURTH FLOOR
WASHINGTON, DC 20007

v 202 298 6700
f 202 298 6666

WWW.QUINNEVANS.COM

AECOM

3101 WILSON BOULEVARD
SUITE 900
ARLINGTON, VA 22201

TEL. 703 682 4900
FAX. 703 682 4901

FERRY FARM PHASE 1 IMPROVEMENTS

268 Kings Hwy, Fredericksburg, VA 22405

QEA # #31402900

Site Details

COMMONWEALTH OF VIRGINIA
ROGER GUY COURTENAY
09/04/10
LANDSCAPE ARCHITECT

SITE PERMIT SUBMISSION
12/19/14

REVISIONS

NO.	DESCRIPTION	DATE

NOT FOR CONSTRUCTION

L-502

12/9/2014 4:09:47 PM F:\PROJECTS\2014\31402900 Ferry Farm Phase 1 Improvements\04_Drawings\Revit\MAD Buildings.rvt

±4" PICKET, ±6" O.C., TYP.

STAGGER RAILS AT POSTS, TYP.

4"-6"ø POST

PHOTOGRAPHS OF EXAMPLE FENCE (N.T.S.)

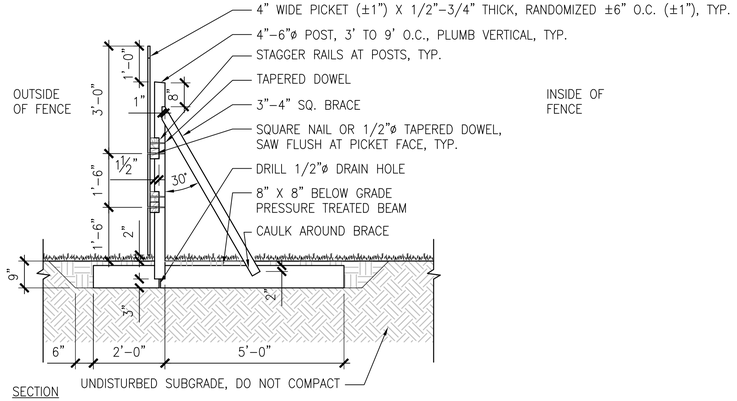

SECTION

NOTE: USE ONLY PERIOD METAL FASTENERS OR ALL WOOD FASTENERS. DO NOT USE MODERN FASTENERS OR MATERIALS ABOVE FINISH GRADE.

1 PICKET FENCE AT HOME FARM

SCALE: 1/2" = 1'-0"

PICT-DT-FENC-PICKET.dwg

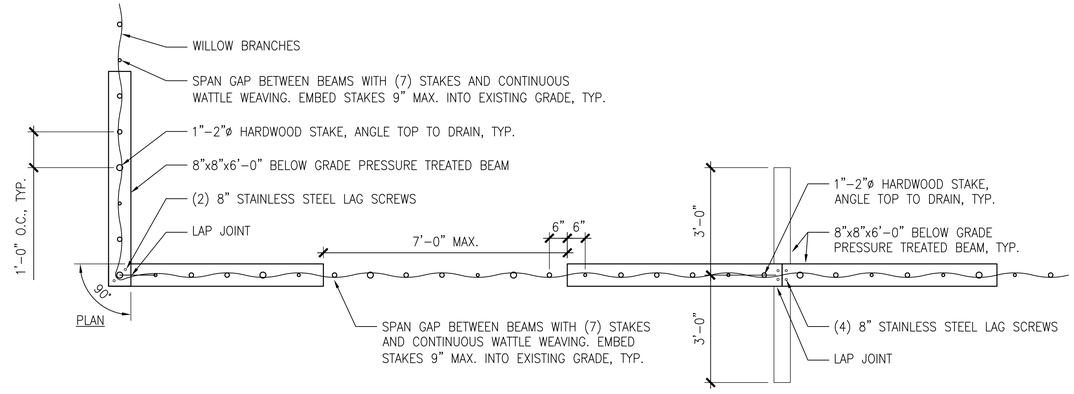

PLAN

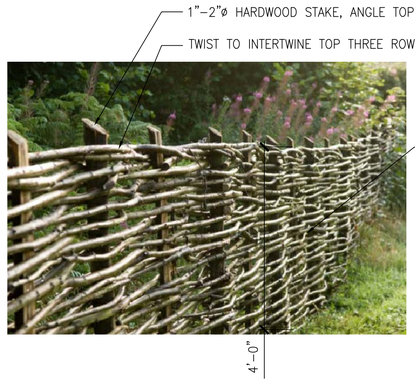

WEAVE WILLOW BRANCHES IN ALTERNATING ROWS AROUND STAKES. PRESS EACH ROW DOWN FIRMLY. EACH WILLOW BRANCH SHALL BE LONG ENOUGH TO WEAVE AROUND A MIN. OF (3) STAKES.

NOTE: APPLY LINSEED OIL TO ALL EXPOSED SURFACES

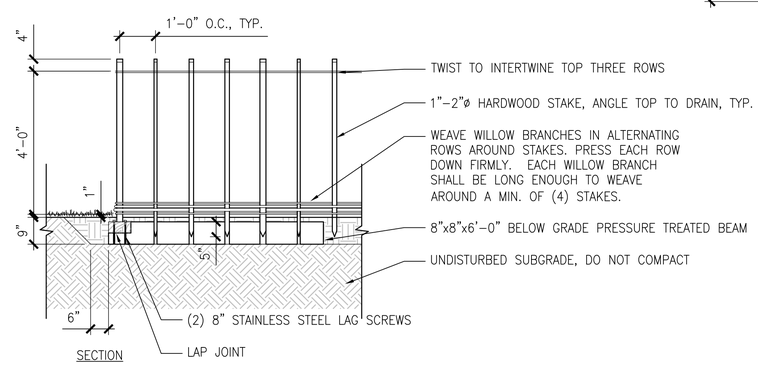

SECTION

2 WATTLE FENCE AT HEN YARD

SCALE: N.T.S.

PICT-DT-FENC-WATTLE.dwg

QUINN EVANS ARCHITECTS

2121 WARD PLACE, NW
FOURTH FLOOR
WASHINGTON, DC 20007

v 202 298 6700
f 202 298 6666

WWW.QUINNEVANS.COM

AECOM

3101 WILSON BOULEVARD
SUITE 900
ARLINGTON, VA 22201

TEL. 703 682 4900
FAX. 703 682 4901

FERRY FARM PHASE 1 IMPROVEMENTS

268 Kings Hwy, Fredericksburg, VA 22405

QEA # #31402900

Site Details

COMMONWEALTH OF VIRGINIA
ROGER GUY COURTENAY
070470
LANDSCAPE ARCHITECT

SITE PERMIT SUBMISSION
12/19/14

REVISIONS

NO.	DESCRIPTION	DATE

NOT FOR CONSTRUCTION

L-503

12/9/2014 4:09:47 PM F:\PROJECTS\2014\31402900 Ferry Farm Phase I Improvements\04_Drawings\Revit\MAD Buildings.rvt

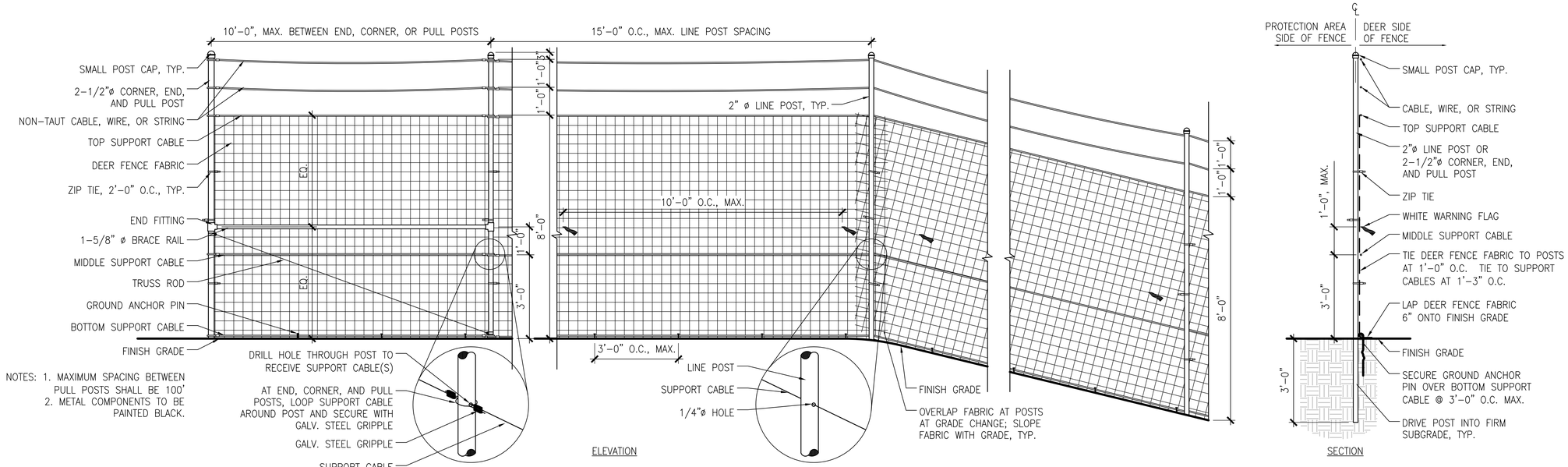

NOTES: 1. MAXIMUM SPACING BETWEEN PULL POSTS SHALL BE 100'
2. METAL COMPONENTS TO BE PAINTED BLACK.

1 DEER FENCE

SCALE: 1/2" = 1'-0"

DT-FENC-DEER.dwg

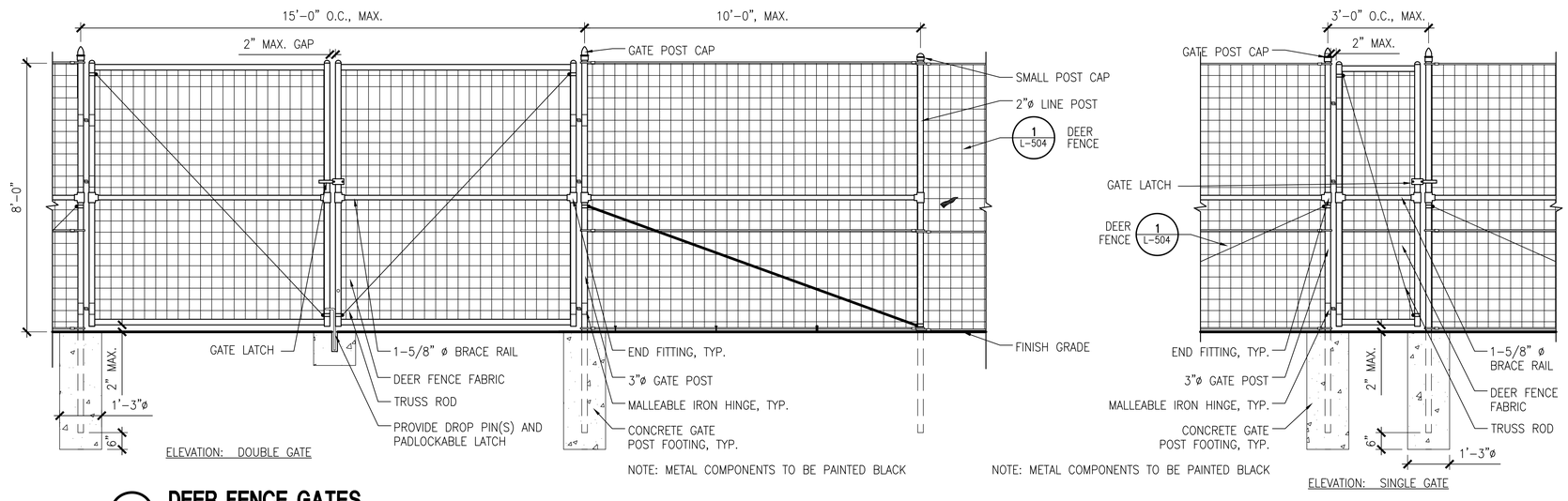

2 DEER FENCE GATES

SCALE: 1/2" = 1'-0"

DT-FENC-DEER_GATES.dwg

2 0 2 4
SCALE IN FEET

QUINN EVANS ARCHITECTS

2121 WARD PLACE, NW
FOURTH FLOOR
WASHINGTON, DC 20007

v 202 298 6700
f 202 298 6666

WWW.QUINNEVANS.COM

AECOM

3101 WILSON BOULEVARD
SUITE 900
ARLINGTON, VA 22201

TEL. 703 682 4900
FAX. 703 682 4901

FERRY FARM PHASE 1 IMPROVEMENTS

268 Kings Hwy, Fredericksburg, VA 22405

QEA # #31402900

Site Details

COMMONWEALTH OF VIRGINIA
ROGER GUY COURTENAY
010470
LANDSCAPE ARCHITECT

SITE PERMIT SUBMISSION
12/19/14

REVISIONS

NO.	DESCRIPTION	DATE

NOT FOR CONSTRUCTION

L-504

12/9/2014 4:09:47 PM F:\PROJECTS\2014\31402900 Ferry Farm Phase I Improvements\04_Drawings\Revit\NAD Buildings.rvt

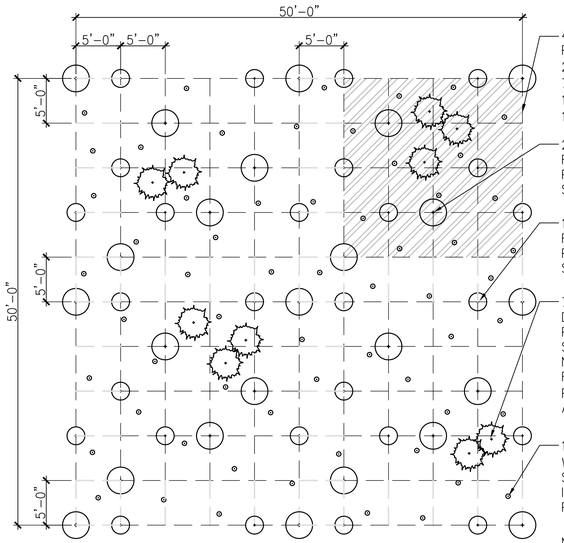

4X4 PLANTING SQUARE, TYP.
PLANTING QUANTITY:
2" CALIPER TREE: 3
7'-8' HT. EVERGREEN: 3
1" CALIPER TREE: 5
1/2" CALIPER TREE WHIP: 12

2" CALIPER TREE IN REPEATING PATTERN PER 4X4 PLANTING SQUARE, TYP.

1" CALIPER TREE IN REPEATING PATTERN PER 4X4 PLANTING SQUARE, TYP.

7'-8' HT. EVERGREEN DISTRIBUTE 2 TO 3 PER 4X4 PLANTING SQUARE IN NATURALISTIC GROUPS FOR 10 TREES TOTAL PER 50'X50' PLANTING AREA, TYP.

1/2" CALIPER TREE WHIP, ONE PER 5'-0" SQUARE. DISTRIBUTE IN NATURALISTIC PATTERN, TYP.

NOTE: FOLLOW ARBORIST'S INSTRUCTIONS FOR PLANTING NEAR EXISTING TREES TO REMAIN AND AT TREE PROTECTION AREAS.

1 PLANTING PLAN DISTRIBUTION "A"

SCALE: 1/8" = 1'-0" DT-PLNT-PLAN ENLARG_A.dwg

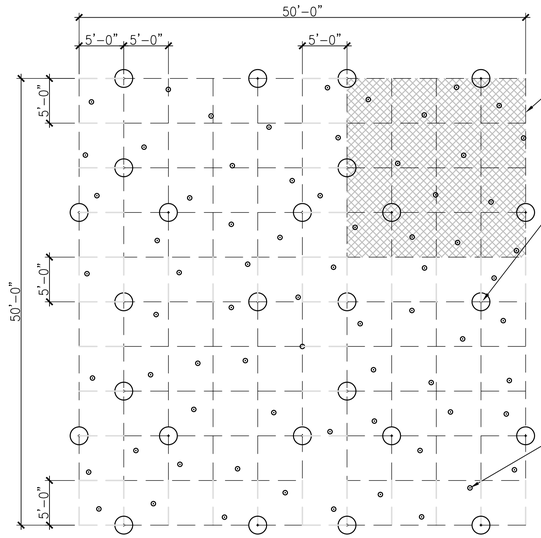

4X4 PLANTING SQUARE, TYP.
PLANTING QUANTITY:
1" CALIPER TREE: 4
1/2" CALIPER TREE WHIP: 13

1" CALIPER TREE IN REPEATING PATTERN PER 4X4 PLANTING SQUARE, TYP.

1/2" CALIPER TREE WHIP, ONE PER 5'-0" SQUARE. DISTRIBUTE IN NATURALISTIC PATTERN, TYP.

2 PLANTING PLAN DISTRIBUTION "B"

SCALE: 1/8" = 1'-0" DT-PLNT-PLAN ENLARG_B.dwg

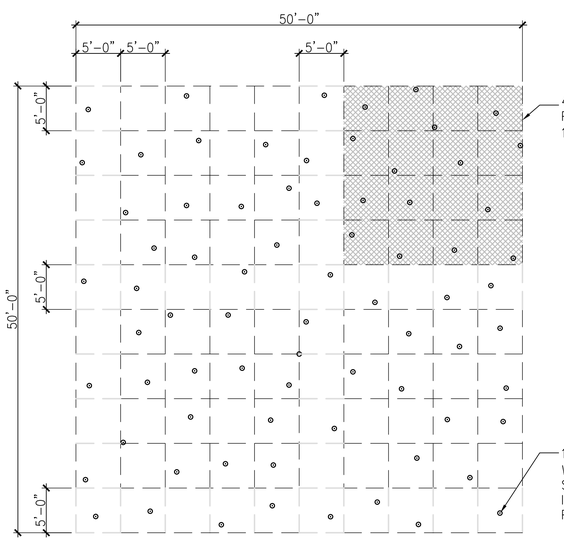

4X4 PLANTING SQUARE, TYP.
PLANTING QUANTITY:
1/2" CALIPER TREE WHIP: 15

1/2" CALIPER TREE WHIP, ONE PER 5'-0" SQUARE. DISTRIBUTE IN NATURALISTIC PATTERN, TYP.

3 PLANTING PLAN DISTRIBUTION "C"

SCALE: 1/8" = 1'-0" DT-PLNT-PLAN ENLARG_C.dwg

FERRY FARM DESIGN DEVELOPMENT PLANTING LIST

KEY	QTY.	SCIENTIFIC NAME	COMMON NAME	SIZE	CONTAINER	SPACING	COMMENTS
CANOPY TREES							
AN		*Acer negundo*	Box Elder				use seed trees on site
AR		*Acer rubrum*	Red Maple				
BN		*Betula nigra*	Betula Nigra				
CA		*Carya alba / ovata*	Shagbark Hickory				
CD		*Castanea dentata*	American Chestnut				
CO		*Cephalanthus occidentalus*	Hackberry				use seed trees on site
DV		*Diospyros virgiana*	Persimmon				
FG		*Fagus grandifolia*	American Beech				
JN		*Juglans nigra*	Black Walnut				
LS		*Liquidambar styraciflua*	Sweet Gum				
LT		*Liriodendron tulipifera*	Tulip Poplar				
NS		*Nyssa sylvatica*	Black Gum				
OA		*Oxydendrum arborum*	Sourwood				
PS		*Pinus serotina*	Black Cherry				
QA		*Quercus alba*	White Oak				
QC		*Quercus coccinea*	Scarlet Oak				
QF		*Quercus falcata*	Southern Red Oak				
QH		*Quercus phellos*	Willow Oak				
QP		*Quercus prinus*	Chestnut Oak				
QR		*Quercus rubra*	Northern Red Oak				
QS		*Quercus stellata*	Post Oak				
QV		*Quercus veluntina*	Black Oak				
UNDERSTORY TREES							
AA		*Amelanchier arborea*	Downy Serviceberry				
AC		*Amelanchier canadensis*	Shadbush				
AT		*Asmina triloba*	Paw Paw				
CC		*Carpinus caroliniana*	American Hophornbeam				
CE		*Cercis canadensis*	Eastern Redbud				
CV		*Chionanthus virginicus*	White Fringetree				
CF		*Cornus florida*	Flowering Dogwood				
MV		*Magnolia virginiana*	Sweetbay Magnolia				
SN		*Salix nigra*	Black Willow				
SA		*Sassafras albidum*	Sassafras				
EVERGREEN TREES							
IO		*Ilex opaca*	American Holly				
JV		*Juniperus virginiana*	Eastern Red Cedar				use seed trees on site
PT		*Pinus taedus*	Loblolly Pine				
TALL SHRUBS							
CL		*Corylus americana*	American Hazelnut				
HC		*Halesia carolina*	Carolina Silverbell				
HV		*Hamamelis virginiana*	Witch Hazel				
IG		*Ilex glabra*	Inkberry				
IV		*Ilex verticulata*	Winterberry				
KL		*Kalmia latifolia*	Mountain Laurel				
SC		*Sambucus canadensis*	Elderberry				
VP		*Viburnum prunifolium*	Blackhaw				
LOW SHRUBS							
CT		*Clethra alnifolia*	Sweet Pepperbush				
KA		*Kalmia angustifolia*	Sheep Laurel				
RP		*Rhododendron periclymenoides*	Pinxter Azalea				
RC		*Rosa carolina*	Pasture Rose				
SL		*Spiraea latifolia*	Meadowsweet				
ST		*Spiraea tomentosa*	Steeplebush				
VA		*Vaccinium angustifolium*	Lowbush Blueberry				
VC		*Vaccinium corymbosum*	Highbush Blueberry				
VS		*Vaccinium stamineum*	Deerberry				
VF		*Viburnum acerifolium*	Maple Leaf Viburnum				
GROUNDCOVERS / ORNAMENTAL GRASSES							
av		*Andropogon virginicus*	Broomsedge				
cp		*Carex pensylvanica*	Pennsylvania Sedge				
ds		*Danthonia spicata*	Poverty Oatgrass				
ev		*Elymus virginicus*	Virginia Wild Rye				
ss		*Schizachyrium scoparium*	Little Bluestem				
FERNS							
dp		*Dennstaedtia punctilobula*	Hay-Scented Fern				
di		*Dryopteris intermedia*	Evergreen Wood-Fern				
PERENNIALS							
ar		*Agertina altissima*	White Snakeroot				
cr		*Chrysogonum virginianum*	Green and Gold				
cl		*Clitoria mariana*	Maryland Butterfly Pea				
de		*Desmondium paniculatum*	Narrow-Leaf Tick Trefoil				
gm		*Geranium maculatum*	Wild Geranium				
di		*Dryopteris intermedia*	Evergreen Wood-Fern				
pd		*Penstemon digitalis*	Foxglove Beardtongue				
pc		*Penstemon canescens*	Eastern Gray Beardtongue				
pb		*Polygonatum biflorum*	Salmon's Seal				
pc		*Penstemon canescens*	Eastern Gray Beardtongue				
pi		*Pycanthemum incanum*	Hoary Mountain Mint				
pt		*Pycanthemum tenuifolium*	Narrow-Leaved Mountain Mint				
rh		*Rudbeckia hirta*	Black Eyed Susan				
pc		*Penstemon canescens*	Eastern Gray Beardtongue				
sa		*Saxifraga virginiensis*	Early Saxifrage				
sv		*Silene virginica*	Fire Pink				
td		*Thalictrum dioicum*	Early Meadowrue				
tv		*Tradescantia virginiana*	Virginia Spiderwort				

8 0 8 16
SCALE IN FEET

QUINN EVANS ARCHITECTS

2121 WARD PLACE, NW
FOURTH FLOOR
WASHINGTON, DC 20007

v 202 298 6700
f 202 298 6666

WWW.QUINNEVANS.COM

AECOM

3101 WILSON BOULEVARD
SUITE 900
ARLINGTON, VA 22201

TEL. 703 682 4900
FAX. 703 682 4901

FERRY FARM PHASE 1 IMPROVEMENTS

268 Kings Hwy, Fredericksburg, VA 22405

QEA # #31402900

Planting Details and Planting Schedule

SITE PERMIT SUBMISSION
12/19/14

REVISIONS

NO.	DESCRIPTION	DATE

NOT FOR CONSTRUCTION

LP-301

12/9/2014 4:09:47 PM F:\PROJECTS\2014\31402900 Ferry Farm Phase I Improvements\04_Drawing\Revit\MAD Buildings.rvt

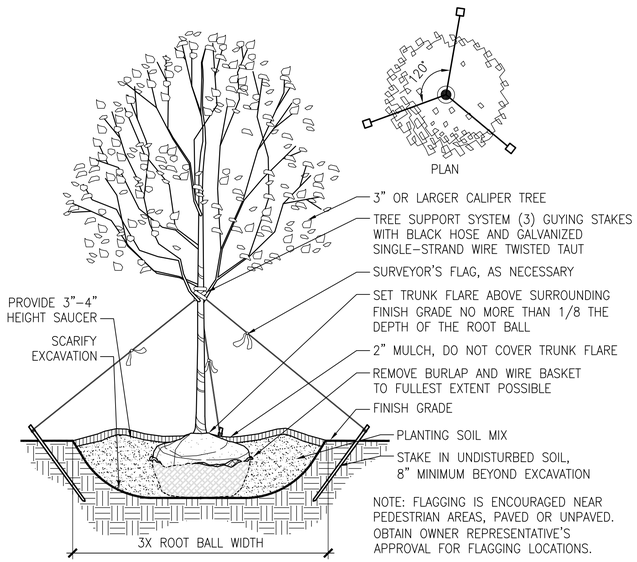

NOTE: FLAGGING IS ENCOURAGED NEAR PEDESTRIAN AREAS, PAVED OR UNPAVED. OBTAIN OWNER REPRESENTATIVE'S APPROVAL FOR FLAGGING LOCATIONS.

1 TREE PLANTING DETAIL - GUYING

SCALE: N.T.S. 0-OG-Tree-Guying.dwg

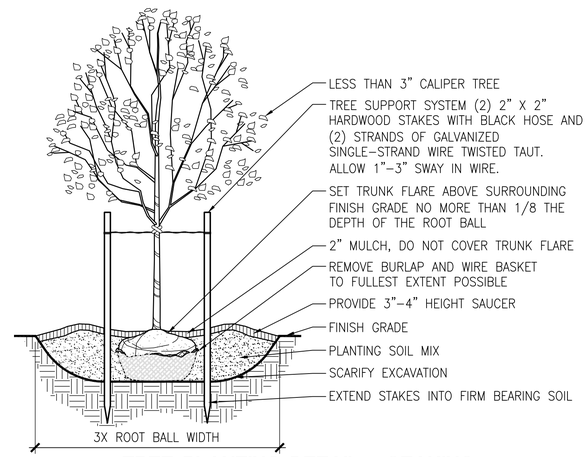

2 TREE PLANTING DETAIL - STAKING

SCALE: N.T.S. 0-OG-Tree-Staking.dwg

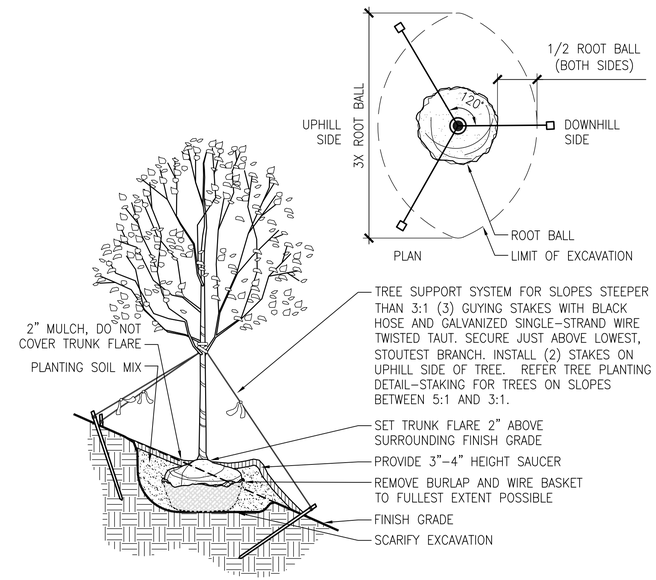

3 TREE PLANTING DETAIL - ON SLOPE

SCALE: N.T.S. 0-OG-Tree-Slope.dwg

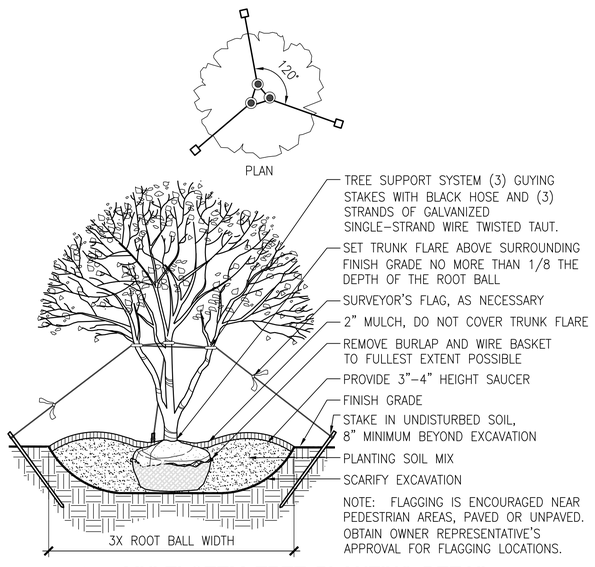

NOTE: FLAGGING IS ENCOURAGED NEAR PEDESTRIAN AREAS, PAVED OR UNPAVED. OBTAIN OWNER REPRESENTATIVE'S APPROVAL FOR FLAGGING LOCATIONS.

4 MULTI-STEM TREE PLANTING DETAIL

SCALE: N.T.S. 0-OG-Multistem.dwg

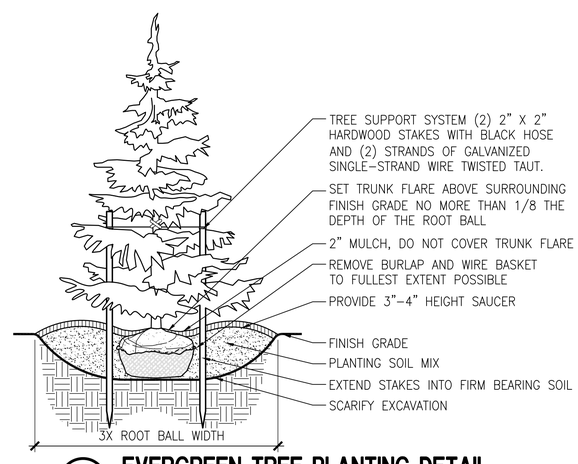

5 EVERGREEN TREE PLANTING DETAIL

SCALE: N.T.S. 0-OG-Evergreen.dwg

TREE HEIGHT	TREE CALIPER	SUPPORT SYSTEM	QTY.	WIRE OR CABLE	TURNBUCKLE	HOSE
8'-12'	LESS THAN 3"	7' UPRIGHT STAKE	2	14 GAUGE WIRE	--	1/2"
12'-14'	3" AND UP	GUY	3	12 GAUGE WIRE	--	1/2"
14'-20'	4" AND UP	GUY	3	12 GAUGE WIRE	--	3/4"
20' AND OVER	6" AND UP	DEADMAN	3*	3/16" CABLE*	3/8" X 6"*	3/4"

* OR AS APPROPRIATE

6 TREE SUPPORT SCHEDULE

SCALE: NO SCALE 0-OG-Tree-Support.dwg

QUINN EVANS ARCHITECTS
2121 WARD PLACE, NW
FOURTH FLOOR
WASHINGTON, DC 20007
v 202 298 6700
f 202 298 6666
WWW.QUINNEVANS.COM

AECOM
3101 WILSON BOULEVARD
SUITE 900
ARLINGTON, VA 22201
TEL. 703 682 4900
FAX. 703 682 4901

FERRY FARM PHASE 1 IMPROVEMENTS

268 Kings Hwy, Fredericksburg, VA 22405

QEA # #31402900

Planting Details

COMMONWEALTH OF VIRGINIA
ROGER GUY COURTENAY
9/10/10
LANDSCAPE ARCHITECT

SITE PERMIT SUBMISSION
12/19/14

REVISIONS

NO.	DESCRIPTION	DATE

NOT FOR CONSTRUCTION

LP-302

12/9/2014 4:09:47 PM F:\PROJECTS\2014\31402900 Ferry Farm Phase 1 Improvements\04_Drawings\Revit\MEP\ Buildings.rvt

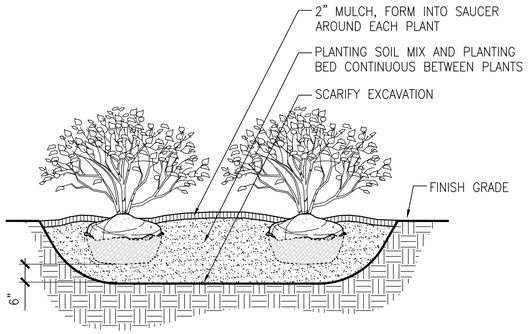

1 SHRUB PLANTING DETAIL

SCALE: N.T.S. 0-OG-Shrubs.dwg

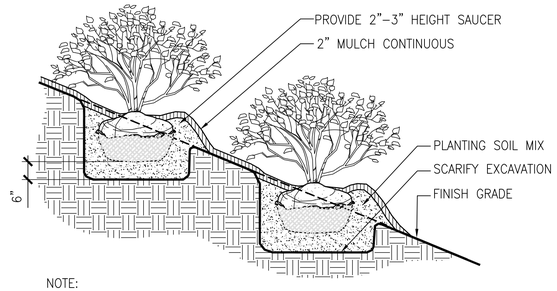

NOTE:
POCKET PLANT ON SLOPES STEEPER THAN 3:1.
PLANTING SOIL MIX AND PLANTING BED CONTINUOUS BETWEEN PLANTS ON SLOPES AT 3:1 OR LESS.

2 SHRUB PLANTING DETAIL - ON SLOPE

SCALE: N.T.S. 0-OG-Shrubs-Slope.dwg

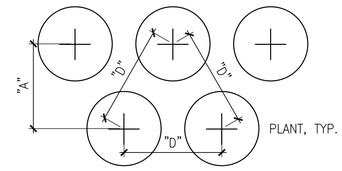

PLANT SPACING "D"	ROW "A"
6" O.C.	5" O.C.
8" O.C.	7" O.C.
10" O.C.	9" O.C.
12" O.C.	10" O.C.
15" O.C.	13" O.C.
18" O.C.	16" O.C.
24" O.C.	20" O.C.
36" O.C.	26" O.C.

NOTE: INSTALL PLANTS WITH TRIANGULAR SPACING UNLESS OTHERWISE INDICATED ON DRAWINGS.

3 PLANT SPACING DETAIL

SCALE: N.T.S. 0-OG-Spacing.dwg

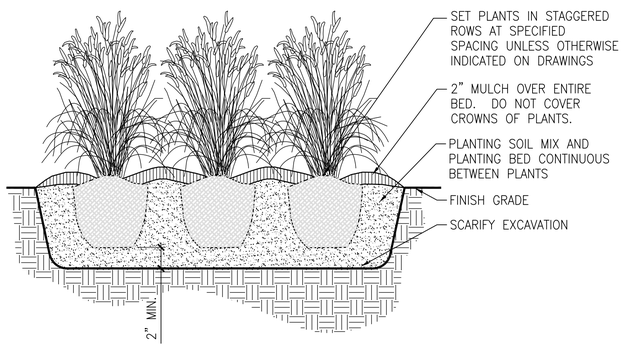

4 PERENNIALS & ORNAMENTAL GRASSES

SCALE: N.T.S. 0-OG-Perennials.dwg

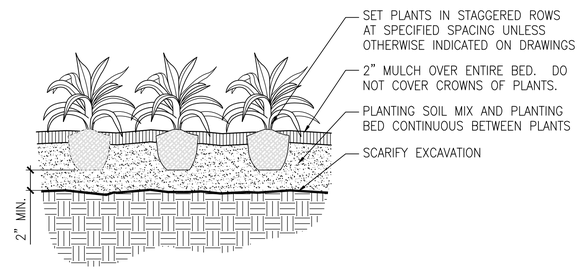

5 GROUND COVER PLANTING DETAIL

SCALE: N.T.S. 0-OG-Groundcovers.dwg

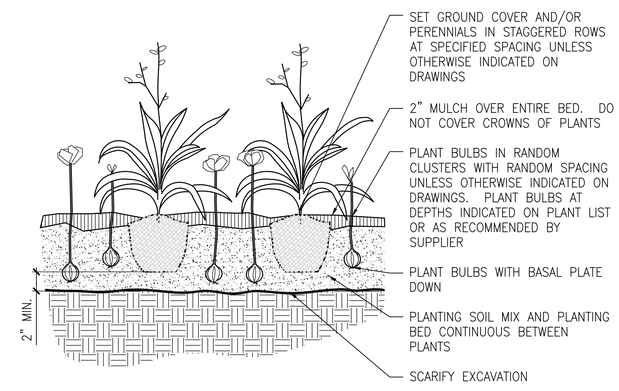

6 INTERPLANTING WITH BULBS DETAIL

SCALE: N.T.S. 0-OG-GC-Bulbs.dwg

QUINN EVANS ARCHITECTS

2121 WARD PLACE, NW
FOURTH FLOOR
WASHINGTON, DC 20007

v 202 298 6700
f 202 298 6666

WWW.QUINNEVANS.COM

AECOM

3101 WILSON BOULEVARD
SUITE 900
ARLINGTON, VA 22201

TEL. 703 682 4900
FAX. 703 682 4901

FERRY FARM PHASE 1 IMPROVEMENTS

268 Kings Hwy, Fredericksburg, VA 22405

QEA # #31402900

Planting Details

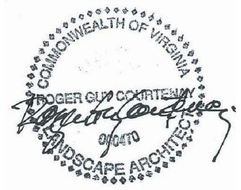

SITE PERMIT SUBMISSION
12/19/14

REVISIONS

NO.	DESCRIPTION	DATE

NOT FOR CONSTRUCTION

LP-303

12/9/2014 4:09:47 PM F:\PROJECTS\2014\31402900 Ferry Farm Phase I Improvements\04_Drawings\Revit\MAD Buildings.rvt

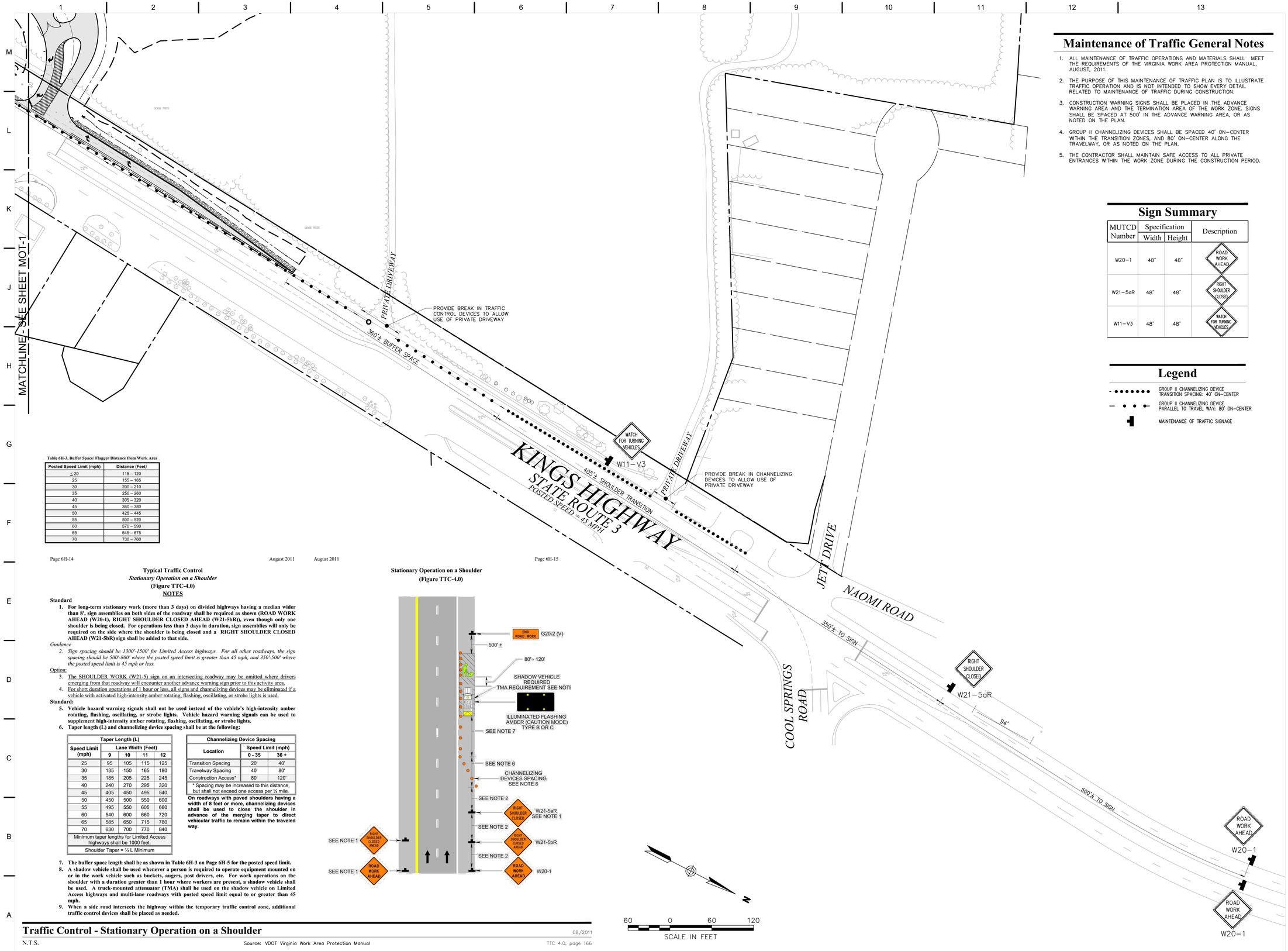

Maintenance of Traffic General Notes

1. ALL MAINTENANCE OF TRAFFIC OPERATIONS AND MATERIALS SHALL MEET THE REQUIREMENTS OF THE VIRGINIA WORK AREA PROTECTION MANUAL, AUGUST, 2011.
2. THE PURPOSE OF THIS MAINTENANCE OF TRAFFIC PLAN IS TO ILLUSTRATE TRAFFIC OPERATION AND IS NOT INTENDED TO SHOW EVERY DETAIL RELATED TO MAINTENANCE OF TRAFFIC DURING CONSTRUCTION.
3. CONSTRUCTION WARNING SIGNS SHALL BE PLACED IN THE ADVANCE WARNING AREA AND THE TERMINATION AREA OF THE WORK ZONE. SIGNS SHALL BE SPACED AT 500' IN THE ADVANCE WARNING AREA, OR AS NOTED ON THE PLAN.
4. GROUP II CHANNELIZING DEVICES SHALL BE SPACED 40' ON-CENTER WITHIN THE TRANSITION ZONES, AND 80' ON-CENTER ALONG THE TRAVELWAY, OR AS NOTED ON THE PLAN.
5. THE CONTRACTOR SHALL MAINTAIN SAFE ACCESS TO ALL PRIVATE ENTRANCES WITHIN THE WORK ZONE DURING THE CONSTRUCTION PERIOD.

Sign Summary

MUTCD Number	Specification Width	Specification Height	Description
W20-1	48"	48"	ROAD WORK AHEAD
W21-5aR	48"	48"	RIGHT SHOULDER CLOSED
W11-V3	48"	48"	WATCH FOR TURNING VEHICLES

Legend

- GROUP II CHANNELIZING DEVICE TRANSITION SPACING: 40' ON-CENTER
- GROUP II CHANNELIZING DEVICE PARALLEL TO TRAVEL WAY: 80' ON-CENTER
- MAINTENANCE OF TRAFFIC SIGNAGE

Table 6H-3, Buffer Space/ Flagger Distance from Work Area

Posted Speed Limit (mph)	Distance (Feet)
≤ 20	115 – 120
25	155 – 165
30	200 – 210
35	250 – 260
40	305 – 320
45	360 – 380
50	425 – 445
55	500 – 520
60	570 – 590
65	645 – 675
70	730 – 760

Typical Traffic Control
Stationary Operation on a Shoulder
(Figure TTC-4.0)
NOTES

Standard

1. **For long-term stationary work (more than 3 days) on divided highways having a median wider than 8', sign assemblies on both sides of the roadway shall be required as shown (ROAD WORK AHEAD (W20-1), RIGHT SHOULDER CLOSED AHEAD (W21-5bR)), even though only one shoulder is being closed. For operations less than 3 days in duration, sign assemblies will only be required on the side where the shoulder is being closed and a RIGHT SHOULDER CLOSED AHEAD (W21-5bR) sign shall be added to that side.**

Guidance

2. *Sign spacing should be 1300'-1500' for Limited Access highways. For all other roadways, the sign spacing should be 500'-800' where the posted speed limit is greater than 45 mph, and 350'-500' where the posted speed limit is 45 mph or less.*

Option:

3. The SHOULDER WORK (W21-5) sign on an intersecting roadway may be omitted where drivers emerging from that roadway will encounter another advance warning sign prior to this activity area.
4. For short duration operations of 1 hour or less, all signs and channelizing devices may be eliminated if a vehicle with activated high-intensity amber rotating, flashing, oscillating, or strobe lights is used.

Standard:

5. **Vehicle hazard warning signals shall not be used instead of the vehicle's high-intensity amber rotating, flashing, oscillating, or strobe lights. Vehicle hazard warning signals can be used to supplement high-intensity amber rotating, flashing, oscillating, or strobe lights.**
6. **Taper length (L) and channelizing device spacing shall be at the following:**

Taper Length (L)				
Speed Limit (mph)	Lane Width (Feet) 9	10	11	12
25	95	105	115	125
30	135	150	165	180
35	185	205	225	245
40	240	270	295	320
45	405	450	495	540
50	450	500	550	600
55	495	550	605	660
60	540	600	660	720
65	585	650	715	780
70	630	700	770	840
Minimum taper lengths for Limited Access highways shall be 1000 feet.				
Shoulder Taper = ½ L Minimum				

Channelizing Device Spacing		
Location	Speed Limit (mph) 0 - 35	36 +
Transition Spacing	20'	40'
Travelway Spacing	40'	80'
Construction Access*	80'	120'
* Spacing may be increased to this distance, but shall not exceed one access per ¼ mile.		

On roadways with paved shoulders having a width of 8 feet or more, channelizing devices shall be used to close the shoulder in advance of the merging taper to direct vehicular traffic to remain within the traveled way.

7. **The buffer space length shall be as shown in Table 6H-3 on Page 6H-5 for the posted speed limit.**
8. **A shadow vehicle shall be used whenever a person is required to operate equipment mounted on or in the work vehicle such as buckets, augers, post drivers, etc. For work operations on the shoulder with a duration greater than 1 hour where workers are present, a shadow vehicle shall be used. A truck-mounted attenuator (TMA) shall be used on the shadow vehicle on Limited Access highways and multi-lane roadways with posted speed limit equal to or greater than 45 mph.**
9. **When a side road intersects the highway within the temporary traffic control zone, additional traffic control devices shall be placed as needed.**

Stationary Operation on a Shoulder
(Figure TTC-4.0)

Traffic Control - Stationary Operation on a Shoulder

08/2011

N.T.S. Source: VDOT Virginia Work Area Protection Manual TTC 4.0, page 166

QUINN EVANS ARCHITECTS
2121 WARD PLACE, NW
FOURTH FLOOR
WASHINGTON, DC 20036
v 202 298 6700
f 202 298 6666
WWW.QUINNEVANS.COM

vhb
115 SOUTH 15TH STREET
SUITE 200
RICHMOND, VIRGINIA 23219
804.343.7100 | FAX 804.343.1713

FERRY FARM PHASE 1 IMPROVEMENTS

268 Kings Hwy, Fredericksburg, VA 22405

QEA # 31402900

Maintenance of Traffic

COMMONWEALTH OF VIRGINIA
JOHN P. CARTY
Lic. No. 039452
12/19/14
PROFESSIONAL ENGINEER

SITE PERMIT SUBMISSION
12/19/14

REVISIONS

NO.	DESCRIPTION	DATE

MOT-1

\\VHBPROJ\RICHMOND\43791\2-07 QEA FERRY FARM PHASE I\CAD\LDP\LANSE\T3791207-MOT
12/9/2014 5:09:41 PM

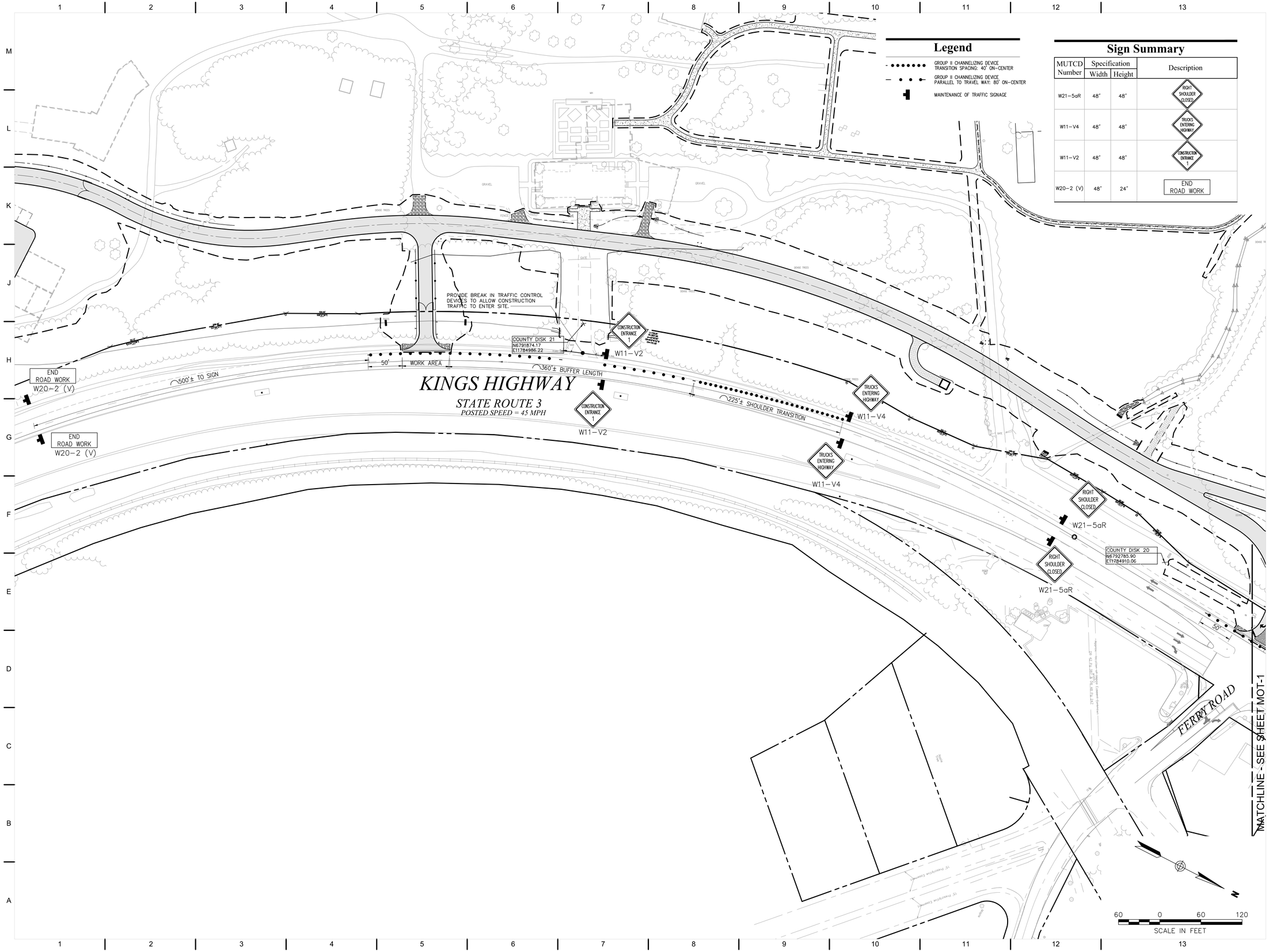

Legend

- GROUP II CHANNELIZING DEVICE TRANSITION SPACING: 40' ON-CENTER
- GROUP II CHANNELIZING DEVICE PARALLEL TO TRAVEL WAY: 80' ON-CENTER
- MAINTENANCE OF TRAFFIC SIGNAGE

Sign Summary

MUTCD Number	Specification Width	Specification Height	Description
W21-5aR	48"	48"	RIGHT SHOULDER CLOSED
W11-V4	48"	48"	TRUCKS ENTERING HIGHWAY
W11-V2	48"	48"	CONSTRUCTION ENTRANCE 1
W20-2 (V)	48"	24"	END ROAD WORK

QUINN EVANS ARCHITECTS
2121 WARD PLACE, NW
FOURTH FLOOR
WASHINGTON, DC 20036
v 202 298 6700
f 202 298 6666
WWW.QUINNEVANS.COM

vhb
115 SOUTH 15TH STREET
SUITE 200
RICHMOND, VIRGINIA 23219
804.343.7100 | FAX 804.343.1713

FERRY FARM PHASE 1 IMPROVEMENTS

268 Kings Hwy, Fredericksburg, VA 22405

QEA # 31402900

Maintenance of Traffic

COMMONWEALTH OF VIRGINIA
JOHN P. CARTY
Lic. No. 039452
12/19/14
PROFESSIONAL ENGINEER

SITE PERMIT SUBMISSION
12/19/14

REVISIONS

NO.	DESCRIPTION	DATE

MOT-2

12/19/2014 5:09:41 PM \\VHBPROJRICHMOND\37912.07 QEA FERRY FARM PHASE I\CAD\LDP\LANSE\37912.07-MOT

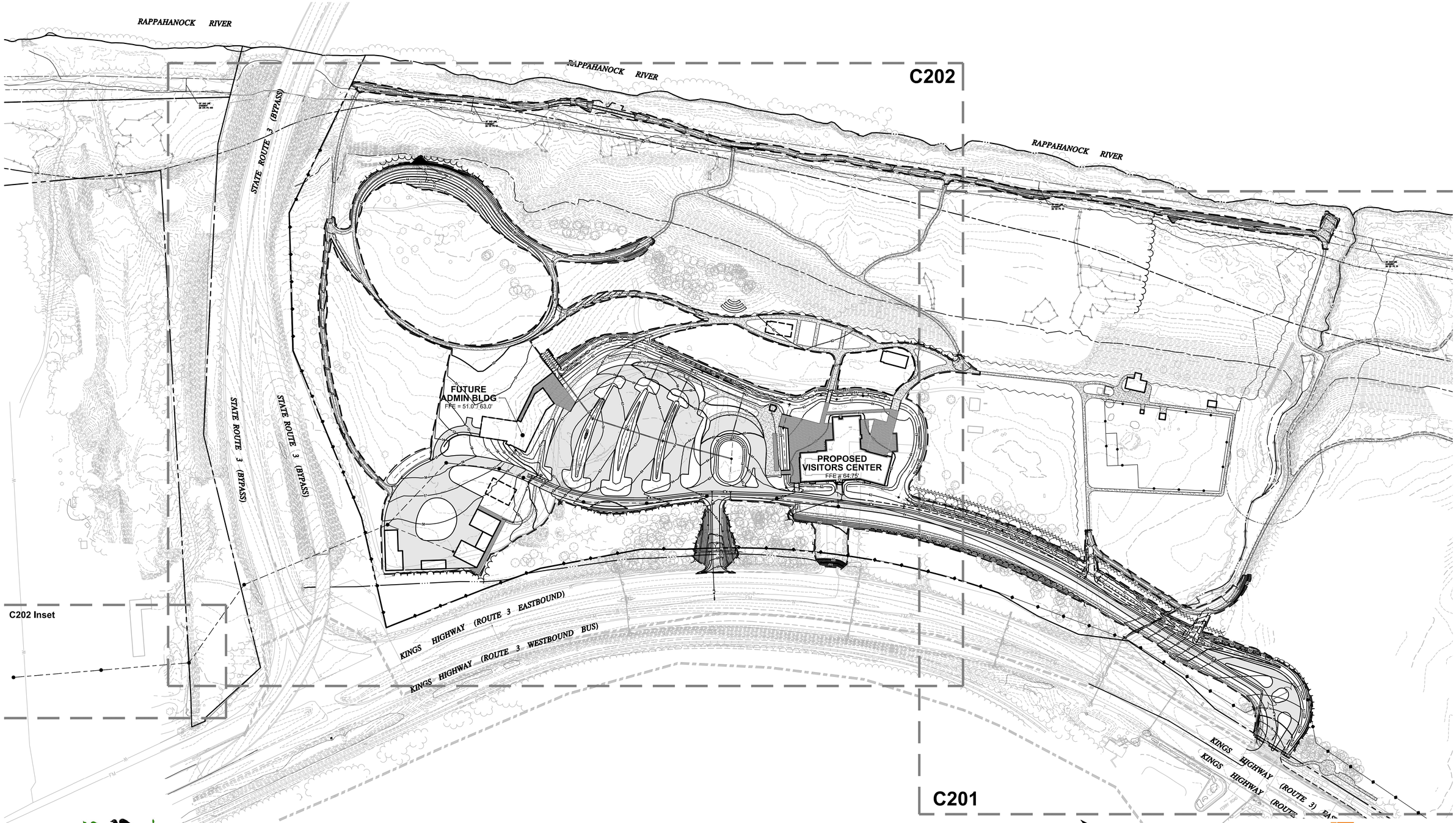

THE GEORGE WASHINGTON FOUNDATION

OVERALL SITE PLAN
ULTIMATE DEVELOPMENT

100 0 100 200
SCALE IN FEET

QUINN EVANS ARCHITECTS
in association with AECOM & VHB
#31302200 - 05 June 2014
Stafford County, VA - #