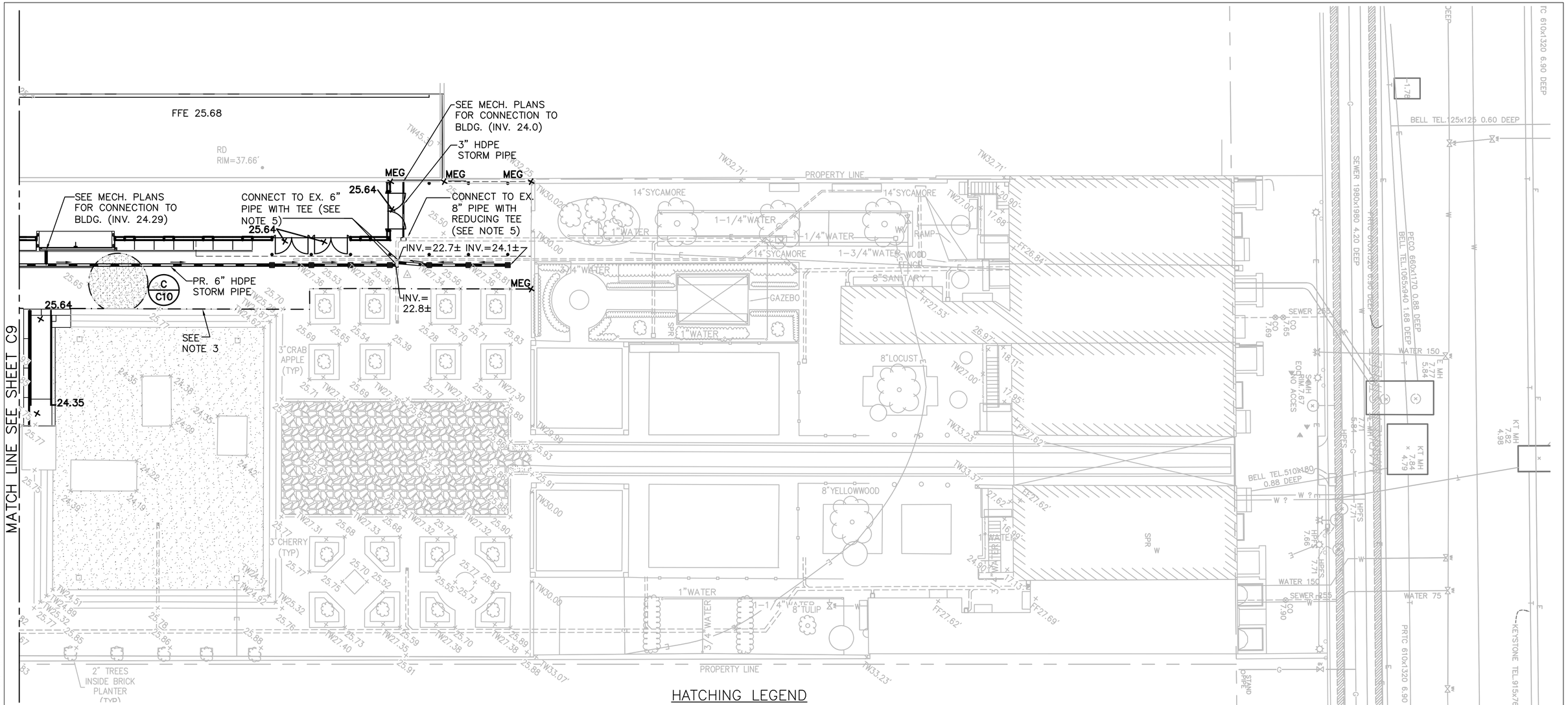

HATCHING LEGEND

- EX. COBBLE STONE
- EX. SLATE PAVERS
- EX. GRANITE EDGE

NOTES

1. CONTRACTOR SHALL LOCATE TOP OF BUILDING UNDER STORM PIPE PRIOR TO TRENCH EXCAVATION. CONTRACTOR SHALL EXCAVATE THE STORM PIPE TRENCH BY HAND.
2. CONTRACTOR SHALL ENSURE THAT NO AREA IS LEFT UNSTABALIZED AT THE END OF THE WORK DAY. EXCAVATIONS SHALL BE BACK-FILLED, STABILIZED AND SECURED AT THE END OF EACH DAY
3. BRICK AND SLATE PAVERS ARE TO MATCH THE EXISTING BRICK AND SLATE PAVERS WITHIN THE LIMITS OF DEMO (SEE ARCHITECTURAL PLANS FOR REPLACEMENTS OF SLATE AND BRICK PAVERS AND OTHER ASSOCIATED HARDSCAPING)
4. CONTRACTOR SHALL ENSURE POSITIVE DRAINAGE AWAY FROM THE BUILDING TO A DRAINAGE INLET STRUCTURES.
5. CONTRACTOR SHALL MATCH INVERT OF THE EXISTING STORM LINES. CONTRACTOR SHALL PROVIDE POSITIVE DRAINAGE FOR THE PROPOSED STORM LINE

A/E FIRM	DESIGNED:	SUB SHEET NO	TITLE OF SHEET	DRAWING NO.
PRIME: QUINN EVANS ARCHITECTS	TJH	C8	GRADING & UTILITIES PLAN	391 100042
SUB: VHB, INC. WILLIAMSBURG,VA	DRAWN: VND		FRANKLIN COURT MUSEUM	PMIS/PKG NO. INDE-8384
	TECH. REVIEW: TJH		INDEPENDENCE NATIONAL HISTORICAL PARK	SHEET 17 OF 219
	DATE: 03/15/2011			

15 MARCH 2011 AUTOCAD2008 P:\INDE\8384\CD\CIVIL\ C8-GD-UT.DWG

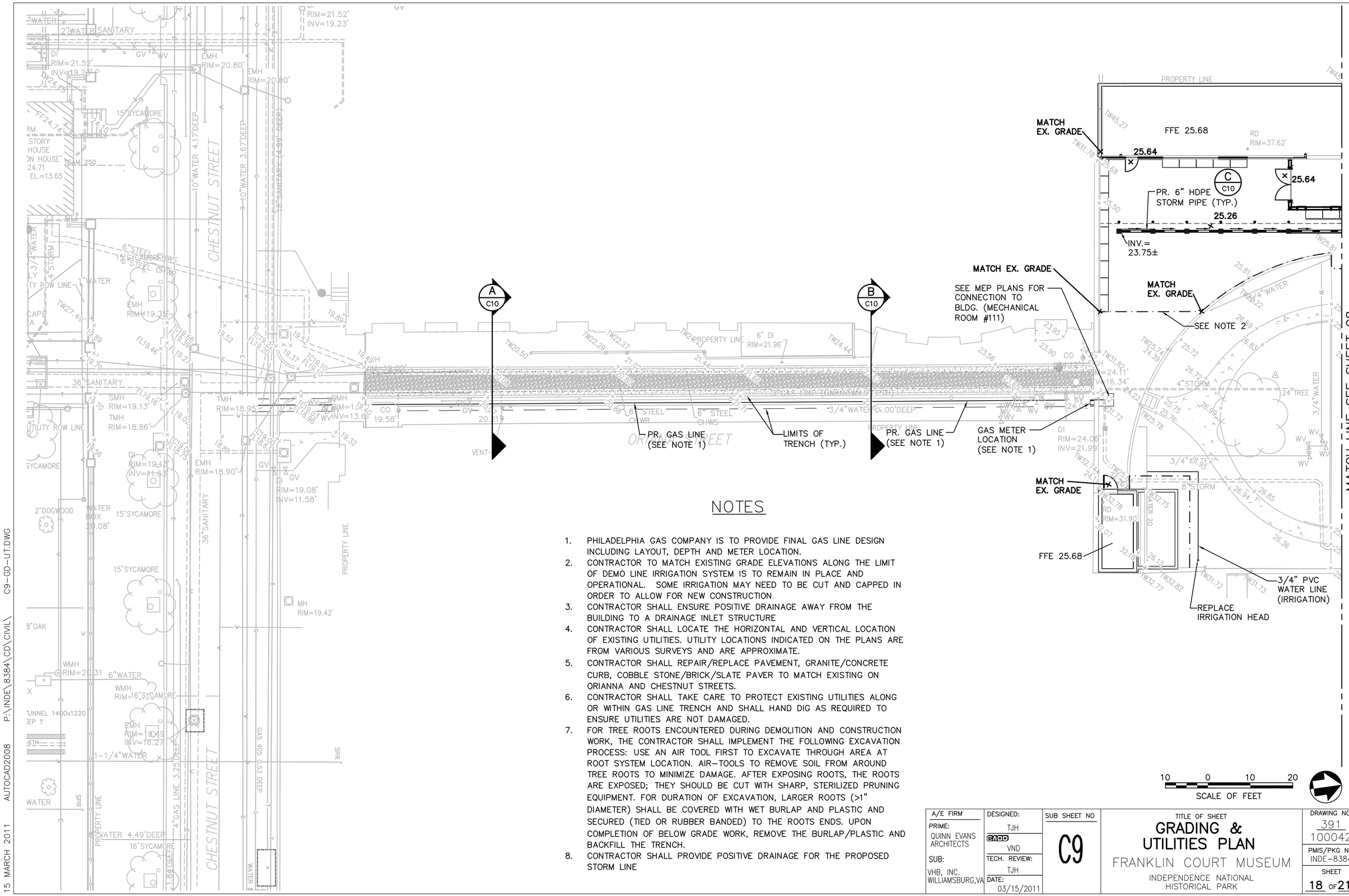

NOTES

1. PHILADELPHIA GAS COMPANY IS TO PROVIDE FINAL GAS LINE DESIGN INCLUDING LAYOUT, DEPTH AND METER LOCATION.
2. CONTRACTOR TO MATCH EXISTING GRADE ELEVATIONS ALONG THE LIMIT OF DEMO LINE IRRIGATION SYSTEM IS TO REMAIN IN PLACE AND OPERATIONAL. SOME IRRIGATION MAY NEED TO BE CUT AND CAPPED IN ORDER TO ALLOW FOR NEW CONSTRUCTION
3. CONTRACTOR SHALL ENSURE POSITIVE DRAINAGE AWAY FROM THE BUILDING TO A DRAINAGE INLET STRUCTURE
4. CONTRACTOR SHALL LOCATE THE HORIZONTAL AND VERTICAL LOCATION OF EXISTING UTILITIES. UTILITY LOCATIONS INDICATED ON THE PLANS ARE FROM VARIOUS SURVEYS AND ARE APPROXIMATE.
5. CONTRACTOR SHALL REPAIR/REPLACE PAVEMENT, GRANITE/CONCRETE CURB, COBBLE STONE/BRICK/SLATE PAVER TO MATCH EXISTING ON ORIANNA AND CHESTNUT STREETS.
6. CONTRACTOR SHALL TAKE CARE TO PROTECT EXISTING UTILITIES ALONG OR WITHIN GAS LINE TRENCH AND SHALL HAND DIG AS REQUIRED TO ENSURE UTILITIES ARE NOT DAMAGED.
7. FOR TREE ROOTS ENCOUNTERED DURING DEMOLITION AND CONSTRUCTION WORK, THE CONTRACTOR SHALL IMPLEMENT THE FOLLOWING EXCAVATION PROCESS: USE AN AIR TOOL FIRST TO EXCAVATE THROUGH AREA AT ROOT SYSTEM LOCATION. AIR-TOOLS TO REMOVE SOIL FROM AROUND TREE ROOTS TO MINIMIZE DAMAGE. AFTER EXPOSING ROOTS, THE ROOTS ARE EXPOSED; THEY SHOULD BE CUT WITH SHARP, STERILIZED PRUNING EQUIPMENT. FOR DURATION OF EXCAVATION, LARGER ROOTS (>1" DIAMETER) SHALL BE COVERED WITH WET BURLAP AND PLASTIC AND SECURED (TIED OR RUBBER BANDED) TO THE ROOTS ENDS. UPON COMPLETION OF BELOW GRADE WORK, REMOVE THE BURLAP/PLASTIC AND BACKFILL THE TRENCH.
8. CONTRACTOR SHALL PROVIDE POSITIVE DRAINAGE FOR THE PROPOSED STORM LINE

A/E FIRM	DESIGNED:	SUB SHEET NO	TITLE OF SHEET	DRAWING NO.
PRIME: QUINN EVANS ARCHITECTS	TJH	C9	GRADING & UTILITIES PLAN	391 100042
SUB: VHB, INC. WILLIAMSBURG,VA	DADD VND		FRANKLIN COURT MUSEUM	PMIS/PKG NO. INDE-8384
	TECH. REVIEW: TJH		INDEPENDENCE NATIONAL HISTORICAL PARK	SHEET 18 OF 219
	DATE: 03/15/2011			

15 MARCH 2011 AUTOCAD2008 P:\INDE\8384\CD\CIVIL\ C9-GD-UT.DWG

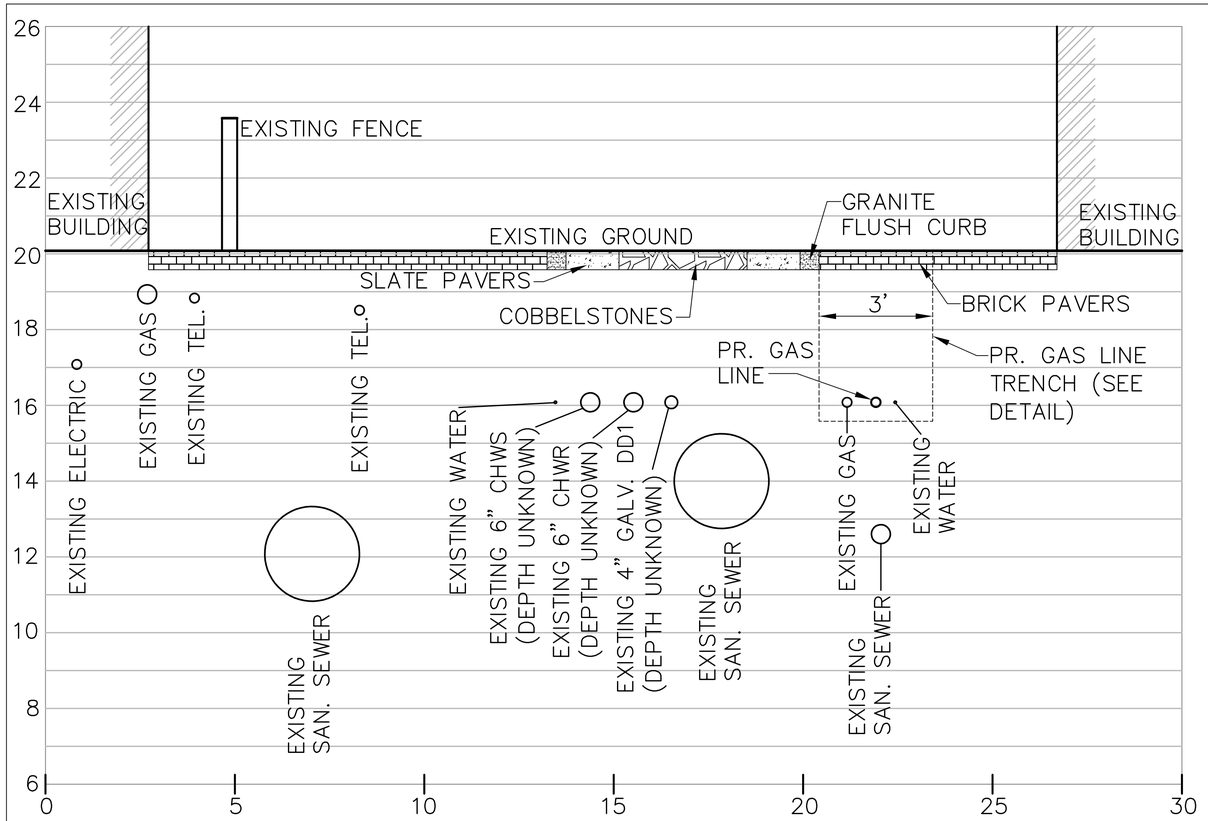

NOTES:

1. PHILADELPHIA GAS COMPANY IS TO PROVIDE FINAL GAS LINE DESIGN INCLUDING LAYOUT, DEPTH AND METER LOCATION.
2. UNDERGROUND UTILITY LOCATIONS ARE BASED UPON VISUAL SURFACE EVIDENCE GATHERED DURING THE FIELD SURVEY AND FROM VERBAL INFORMATION PROVIDED IN THE FIELD BY NATIONAL PARK SERVICE STAFF. NO UNDERGROUND UTILITY LOCATING OR MAPPING WAS PERFORMED BY VHB OR OTHERS. THEREFORE, ALL UTILITIES MAY NOT BE INDICATED ON THE SURVEY. ALL UNDERGROUND UTILITY LOCATIONS SHOULD BE HORIZONTALLY AND VERTICALLY FIELD VERIFIED PRIOR TO CONSTRUCTION.

A / C10 SECTION

SCALE: 1"=2' (HORIZONTAL & VERTICAL)

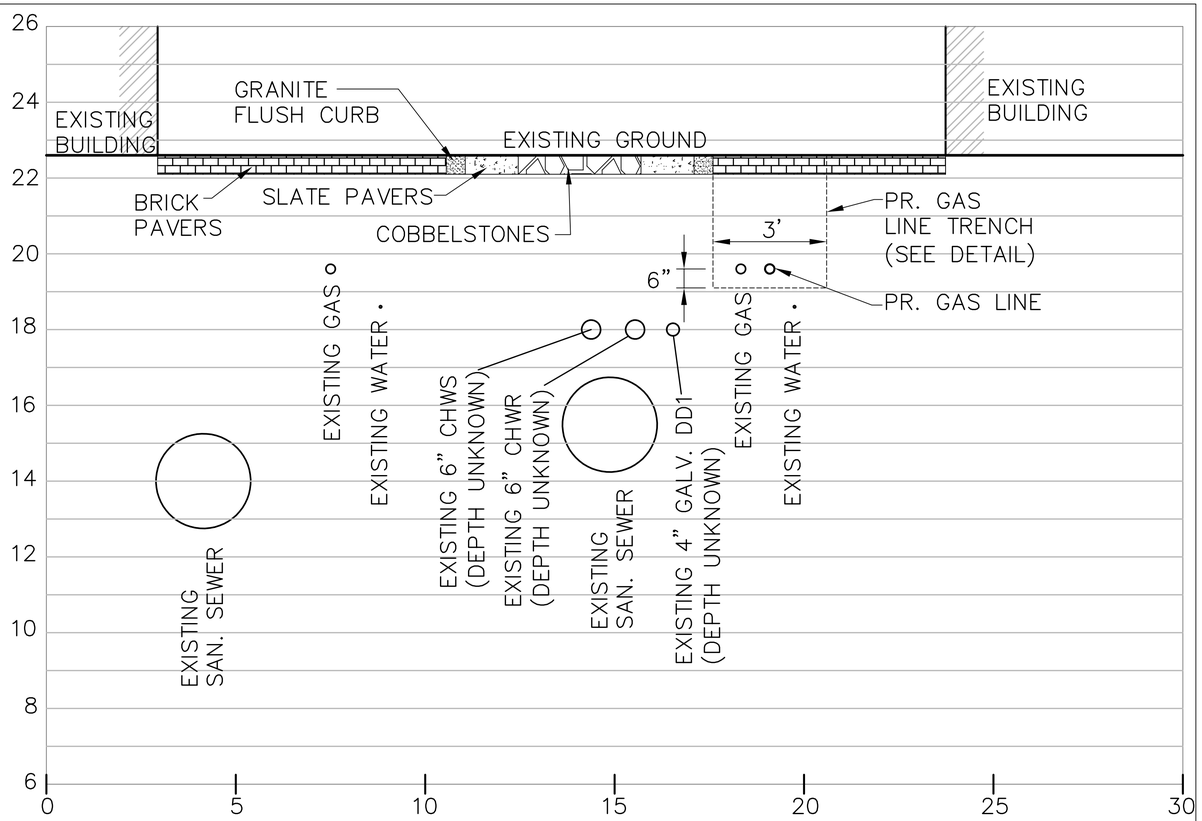

NOTES:

1. PHILADELPHIA GAS COMPANY IS TO PROVIDE FINAL GAS LINE DESIGN INCLUDING LAYOUT, DEPTH AND METER LOCATION.
2. UNDERGROUND UTILITY LOCATIONS ARE BASED UPON VISUAL SURFACE EVIDENCE GATHERED DURING THE FIELD SURVEY AND FROM VERBAL INFORMATION PROVIDED IN THE FIELD BY NATIONAL PARK SERVICE STAFF. NO UNDERGROUND UTILITY LOCATING OR MAPPING WAS PERFORMED BY VHB OR OTHERS. THEREFORE, ALL UTILITIES MAY NOT BE INDICATED ON THE SURVEY. ALL UNDERGROUND UTILITY LOCATIONS SHOULD BE HORIZONTALLY AND VERTICALLY FIELD VERIFIED PRIOR TO CONSTRUCTION.

B / C10 SECTION

SCALE: 1"=2' (HORIZONTAL & VERTICAL)

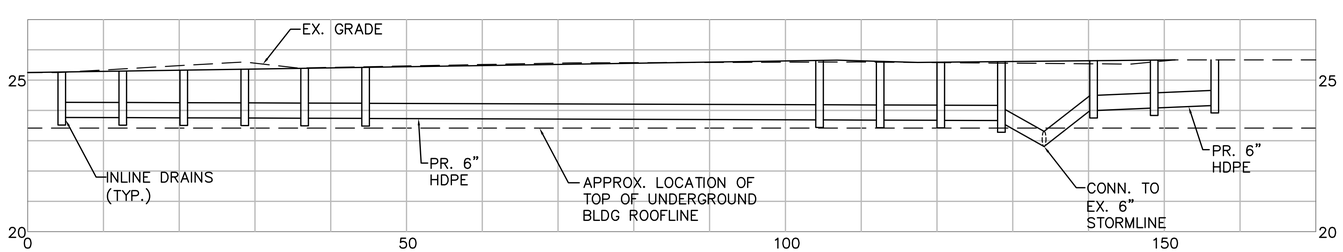

C / C10 STORMLINE PROFILE

SCALE: 1"=10' (HORIZONTAL); 1"=2.5' (VERTICAL)

HORIZONTAL 2 0 2 4

VERTICAL 2 0 2 4

SCALE IN FEET

A/E FIRM	DESIGNED:	SUB SHEET NO	TITLE OF SHEET	DRAWING NO.
PRIME: QUINN EVANS ARCHITECTS	TJH	C10	SECTIONS & PROFILES	391 100042
SUB: VHB, INC. WILLIAMSBURG,VA	DADD VND		FRANKLIN COURT MUSEUM	PMIS/PKG NO. INDE-8384
	TECH. REVIEW: TJH		INDEPENDENCE NATIONAL HISTORICAL PARK	SHEET 19 OF 219
	DATE: 03/15/2011			

15 MARCH 2011 AUTOCAD2008 P:\INDE\8384\CD\CIVIL\ C10-DT.DWG

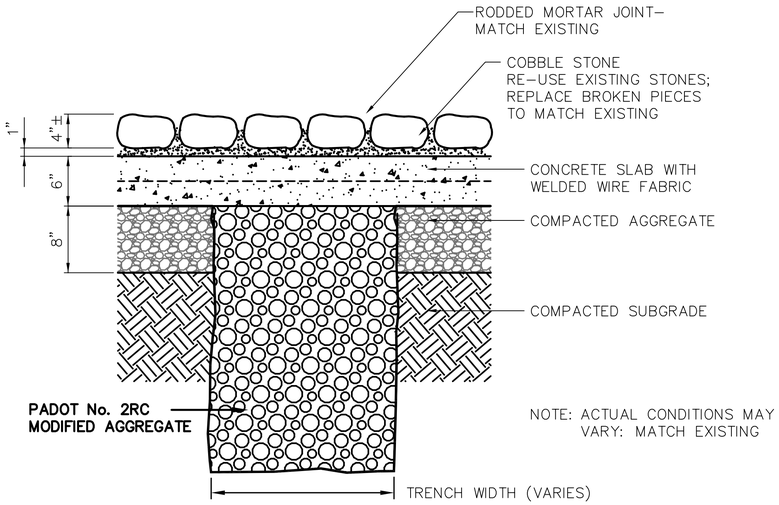

1 C11 COBBLE STONE PAVEMENT RESTORATION
NOT TO SCALE

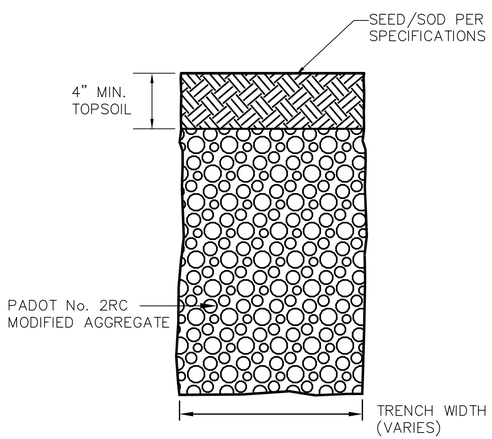

2 C11 NON–PAVED SURFACE AREA TRENCH RESTORATION
NOT TO SCALE

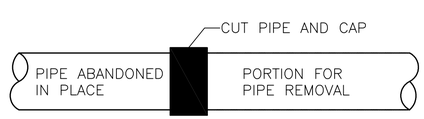

NOTE:

CONTRACTOR IS TO MATCH THE CAP SIZE AND MATERIAL TO THE SIZE AND MATERIAL OF PIPE THAT IS TO BE ABANDONED IN PLACE.

3 C11 UTILITY PIPE CAP DETAIL
NOT TO SCALE

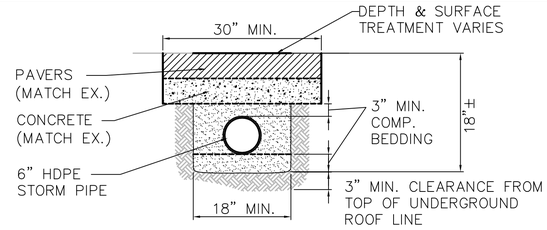

NOTE:
CONTRACTOR SHALL EXCAVATE THE TRENCH BY HAND. LOCATION OF ROOFLINE OF THE UNDERGROUND BUILDING VARIES.

4 C11 UTILITY TRENCH (OVER BUILDING)
NOT TO SCALE

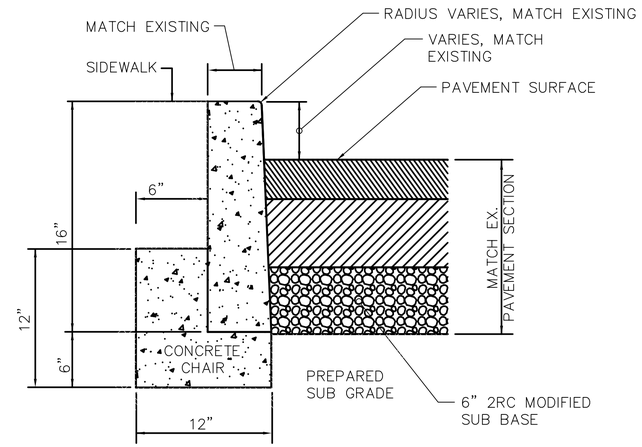

5 C11 GRANITE CURB
NOT TO SCALE

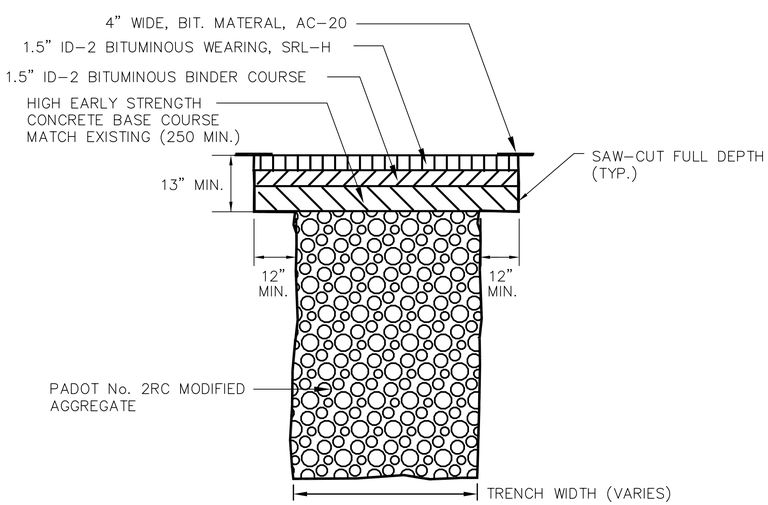

6 C11 CHESTNUT STREET PAVEMENT RESTORATION
NOT TO SCALE

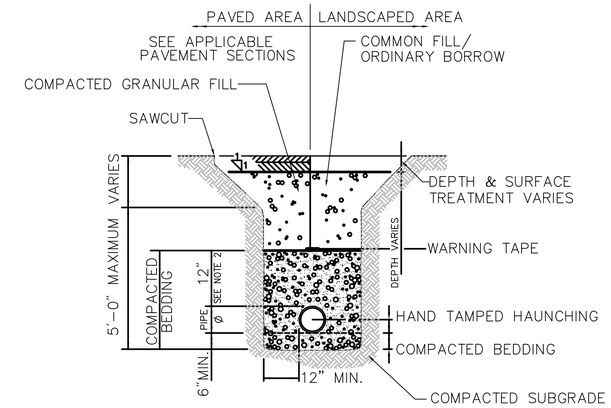

1. USE METALLIC TRACING/WARNING TAPE OVER ALL PIPES. MARKING TAPES SHALL ALSO BE PLACED ABOVE EXISTING UTILITIES EXPOSED WITHIN THE GAS LINE TRENCH.
2. FOR HDPE PIPE, DIMENSION IS 24 INCHES.

7 C11 UTILITY TRENCH (NOT OVER BUILDING)
NOT TO SCALE

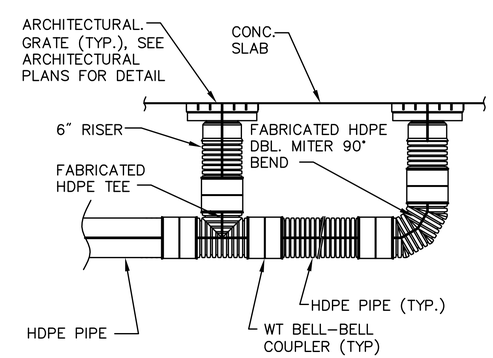

8 C11 INLINE DRAINS
NOT TO SCALE

A/E FIRM	DESIGNED:	SUB SHEET NO	TITLE OF SHEET	DRAWING NO.
PRIME: QUINN EVANS ARCHITECTS	TJH	C11	SITE DETAILS	391 100042
SUB: VHB, INC. WILLIAMSBURG,VA	CADD VND		FRANKLIN COURT MUSEUM	PMIS/PKG NO. INDE–8384
	TECH. REVIEW: TJH		INDEPENDENCE NATIONAL HISTORICAL PARK	SHEET 20 OF 219
	DATE: 03/15/2011			

15 MARCH 2011 AUTOCAD2008 P:\INDE\8384\CD\CIVIL\C11–DT.DWG

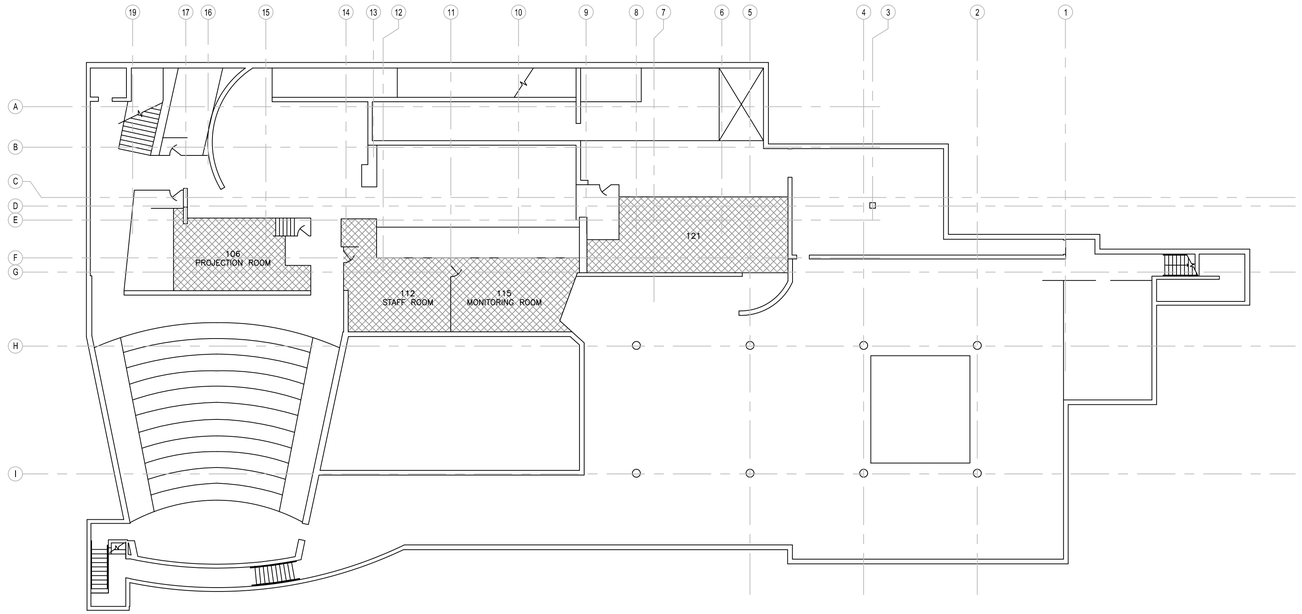

LEGEND

12" X 12" VINYL ASBESTOS FLOOR TILE AND MASTIC TO BE REMOVED

GENERAL NOTES

1. BY SUBMITTING A BID, THE ASBESTOS ABATEMENT CONTRACTOR SIGNIFIES THEY HAVE VISITED THE SITE, EXAMINED CONDITIONS THAT MAY AFFECT THE WORK, VERIFIED STATED QUANTITIES OF ASBESTOS CONTAINING MATERIALS SCHEDULED FOR REMOVAL, AND IS INFORMED AS TO THE EXTENT AND CHARACTER OF THIS PROJECT.
2. THE ASBESTOS ABATEMENT CONTRACTOR SHALL SUPPLY SUFFICIENT TEMPORARY LIGHTING TO ILLUMINATE THE WORK AREAS DURING ABATEMENT. SUFFICIENT LIGHTING MEANS ALL ACTIVE WORK AREAS SHALL BE LIGHTED TO NOT LESS THAN THE MINIMUM ILLUMINATION INTENSITIES LISTED IN OSHA REGULATION 29 CFR 1926.56(A), TABLE D-3 FOR INDOORS: WAREHOUSES, CORRIDORS, HALLWAYS, AND EXIT WAYS (E.G. – 5 FOOT CANDLES).
3. FLOOR PLAN IS SHOWN FOR ILLUSTRATIVE PURPOSES ONLY.
4. NOT ALL ARCHITECTURAL, MECHANICAL, ELECTRICAL, & PLUMBING COMPONENTS SHOWN ON DRAWING.

8 0 8 16

SCALE OF FEET

DESIGNED: BJB	SUB SHEET NO.	TITLE OF SHEET	DRAWING NO.
CADD BJB	HM1	MUSEUM LEVEL FLOOR PLAN	391 / 100042
TECH. REVIEW: BJB			PMIS/PKG NO. 8384
DATE: 3/15/11		FRANKLIN COURT MUSEUM INDEPENDENCE NATIONAL HISTORICAL PARK	SHEET 21 OF 219

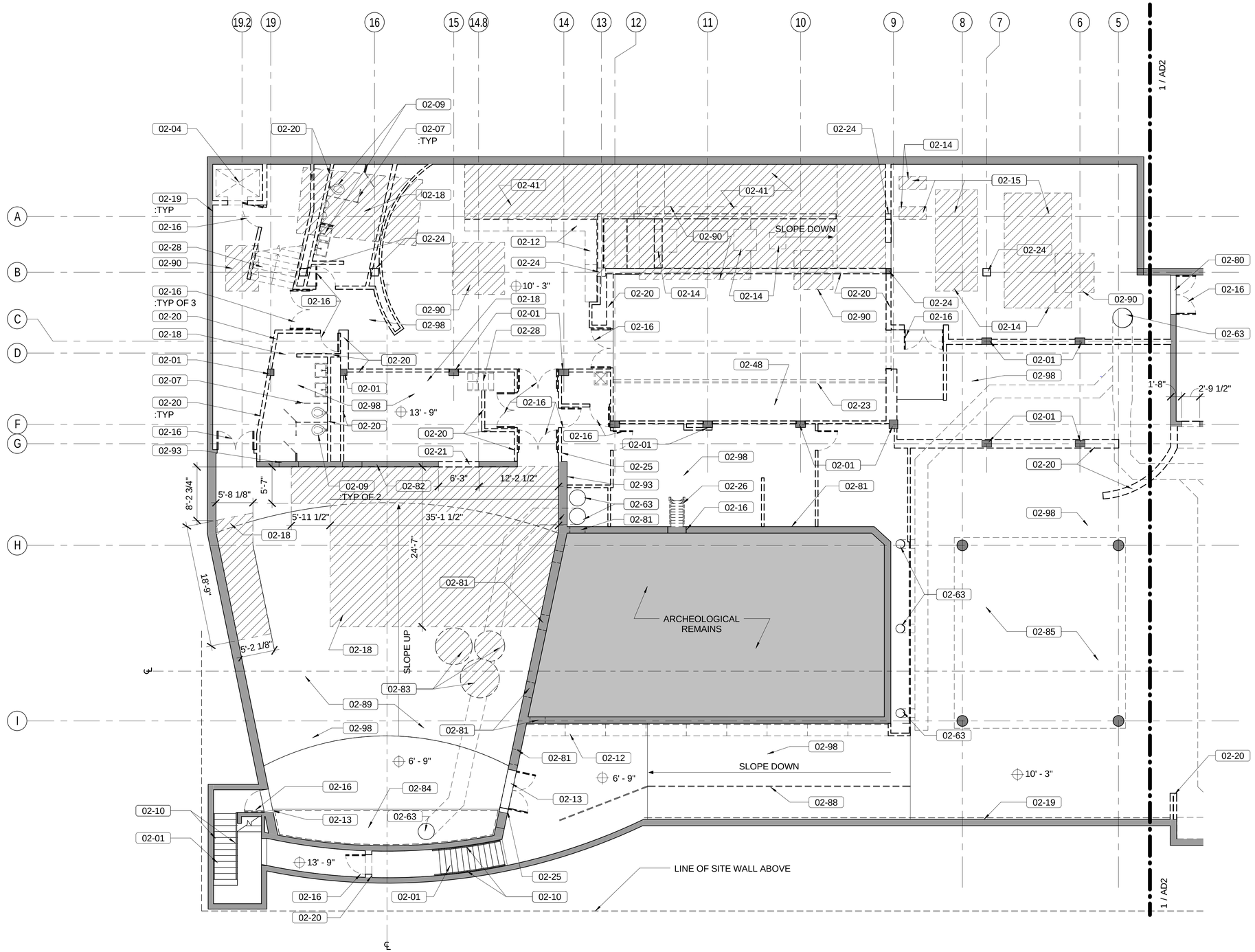

1 / AD1 DEMOLITION PLAN - MUSEUM LEVEL SOUTH

GENERAL NOTES

1. REFER TO SHEETS G4 AND G5 FOR MASTER KEYNOTE LIST
2. REFER TO HAZARDOUS MATERIALS DRAWINGS AND SPECIFICATIONS FOR LOCATIONS AND QUANTITIES OF HAZARDOUS MATERIALS TO BE REMOVED
3. REFER TO STRUCTURAL DRAWINGS AND NEW WORK DRAWINGS FOR COORDINATION OF DEMOLITION SCOPE
4. ARCHEOLOGICAL REMAINS TO BE PROTECTED AT ALL TIMES DURING CONSTRUCTION

KEY NOTES

02-01	EXISTING ITEM TO REMAIN
02-04	REMOVE ELEVATOR AND ALL ASSOCIATED EQUIPMENT AND APPURTENANCES, COMPLETE
02-07	REMOVE ALL TOILET PARTITIONS COMPLETELY
02-09	REMOVE ALL EXISTING FIXTURES; REFER TO PLUMBING DRAWINGS
02-10	EXISTING HANDRAIL AND/OR GUARDRAIL TO REMAIN
02-12	REMOVE AND SALVAGE ITEM AND TURN OVER TO OWNER
02-13	SAWCUT WALL OPENING AS REQUIRED FOR NEW DOOR; REFER TO STRUCTURAL DRAWINGS, DOOR SCHEDULE AND NEW WORK PLANS
02-14	REMOVE EXISTING EQUIPMENT; REFER TO MECHANICAL DRAWINGS
02-15	REMOVE EXISTING CONCRETE PADS; REFER TO STRUCTURAL DRAWINGS
02-16	REMOVE EXISTING DOOR AND FRAME
02-18	SAWCUT EXISTING CONCRETE SLAB AND EXCAVATE AS REQUIRED TO PROVIDE FOR NEW SLAB ON GRADE; REFER TO STRUCTURAL DRAWINGS
02-19	REMOVE ALL FINISHES AND CLEAN EXPOSED CONCRETE
02-20	REMOVE EXISTING WALL
02-21	REMOVE WALL AT LOCATION INDICATED. SEE NEW WORK PLANS
02-23	REMOVE EXISTING CASEWORK AND EXHIBITS
02-24	REMOVE EXISTING CONCRETE COLUMN; REFER TO STRUCTURAL DRAWINGS
02-25	REMOVE EXISTING PORTION OF CONCRETE WALL; REFER TO STRUCTURAL DRAWINGS
02-26	REMOVE EXISTING SHIP LADDER AND ACCESS PANEL
02-27	EXISTING BASEMENT WALLS BELOW TO REMAIN
02-28	REMOVE CONCRETE STAIR ASSEMBLY; REFER TO STRUCTURAL DRAWINGS
02-41	REMOVE EXISTING RAMP; REFER TO STRUCTURAL DRAWINGS
02-48	REMOVE EXISTING WOOD FLOORING, COMPLETE, PREPARE FOR NEW INFILL SLAB
02-63	REMOVE EXISTING DUCTWORK; TERMINATE AND ABANDON DUCKWORK BELOW GRADE; INFILL SLAB PER STRUCTURAL DRAWINGS
02-80	REMOVE EXISTING LOUVER ABOVE DOOR; PREPARE OPENING FOR NEW WORK
02-81	REMOVE DUCT PER MECHANICAL DRAWINGS; PREPARE OPENING FOR NEW WORK
02-82	REMOVE GLAZING AT EXISTING PROJECTION ROOM WINDOWS; PREPARE OPENING FOR NEW WORK
02-83	SAWCUT EXISTING CONCRETE SLAB AND EXCAVATE AS REQUIRED FOR NEW SETTLING BASIN, PUMP AND EJECTOR; REFER TO PLUMBING DRAWINGS
02-84	REMOVE EXISTING PROJECTION SCREEN AND FRAME
02-85	REMOVE EXISTING FLOOR MOUNTED TELEPHONES; PATCH FLOOR AS REQUIRED FOR NEW WORK
02-88	REMOVE EXISTING GUARDRAIL
02-89	REMOVE EXISTING FIXED SEATING
02-90	SAWCUT EXISTING CONCRETE SLAB AND EXCAVATE AS REQUIRED TO INSTALL NEW STRUCTURAL FOOTINGS; REFER TO STRUCTURAL DRAWINGS
02-93	SAWCUT WALL OPENING AS REQUIRED FOR MECHANICAL EQUIPMENT. REFER TO STRUCTURAL AND MECHANICAL DRAWINGS
02-98	REMOVE EXISTING FLOORING

LEGEND

- EXISTING FLOOR SLAB/RAMP TO BE REMOVED
- EXISITING WALL/COLUMN TO BE REMOVED
- EXISTING WALL/COLUMN CONSTRUCTION TO REMAIN
- EXISTING FLOOR ELEVATION
- MATCHLINE

8' 0' 8' 16'
SCALE OF FEET

A/E FIRM	DESIGNED:	SUB SHEET NO.	TITLE OF SHEET	DRAWING NO.
PRIME: QUINN EVANS ARCHITECTS, WASHINGTON, DC	CE; CADD AM; TECH. REVIEW: DC; DATE: 03/15/2011	AD1	DEMOLITION PLAN - MUSEUM LEVEL SOUTH	391 / 100042
			FRANKLIN COURT MUSEUM, INDEPENDENCE NATIONAL HISTORICAL PARK	PMIS/PKG NO. 8384
				SHEET 22 OF 219

C:\Revit Local\20900129 Franklin Court - CENTRAL_bhorrett.rvt

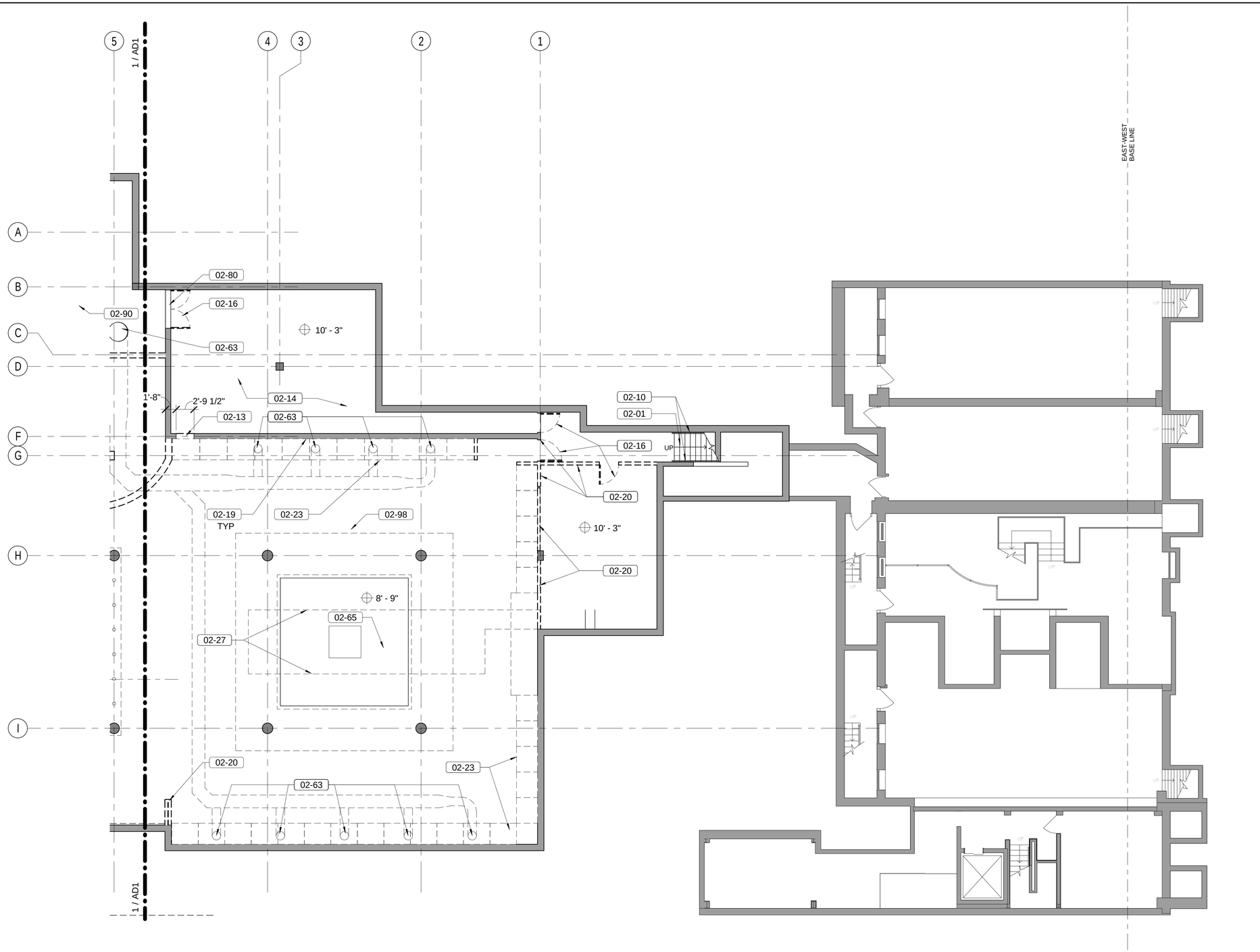

1 AD2 DEMOLITION PLAN - MUSEUM LEVEL NORTH

GENERAL NOTES

1. REFER TO SHEETS G4 AND G5 FOR MASTER KEYNOTE LIST
2. REFER TO HAZARDOUS MATERIALS DRAWINGS AND SPECIFICATIONS FOR LOCATIONS AND QUANTITIES OF HAZARDOUS MATERIALS TO BE REMOVED
3. REFER TO STRUCTURAL DRAWINGS AND NEW WORK DRAWINGS FOR COORDINATION OF DEMOLITION SCOPE
4. ARCHEOLOGICAL REMAINS TO BE PROTECTED AT ALL TIMES DURING CONSTRUCTION

KEY NOTES

01-01	ITEM NOT IN CONTRACT
02-01	EXISTING ITEM TO REMAIN
02-10	EXISTING HANDRAIL AND/OR GUARDRAIL TO REMAIN
02-13	SAWCUT WALL OPENING AS REQUIRED FOR NEW DOOR; REFER TO STRUCTURAL DRAWINGS, DOOR SCHEDULE AND NEW WORK PLANS
02-14	REMOVE EXISTING EQUIPMENT; REFER TO MECHANICAL DRAWINGS
02-16	REMOVE EXISTING DOOR AND FRAME
02-19	REMOVE ALL FINISHES AND CLEAN EXPOSED CONCRETE
02-20	REMOVE EXISTING WALL
02-23	REMOVE EXISTING CASEWORK AND EXHIBITS
02-27	EXISTING BASEMENT WALLS BELOW TO REMAIN
02-63	REMOVE EXISTING DUCTWORK; TERMINATE AND ABANDON DUCKWORK BELOW GRADE; INFILL SLAB PER STRUCTURAL DRAWINGS
02-65	REMOVE EXISTING WORLD STAGE EQUIPMENT
02-80	REMOVE EXISTING LOUVER ABOVE DOOR; PREPARE OPENING FOR NEW WORK
02-90	SAWCUT EXISTING CONCRETE SLAB AND EXCAVATE AS REQUIRED TO INSTALL NEW STRUCTURAL FOOTINGS; REFER TO STRUCTURAL DRAWINGS
02-98	REMOVE EXISTING FLOORING

LEGEND

- EXISTING FLOOR SLAB TO BE REMOVED
- EXISITING WALL/COLUMN TO BE REMOVED
- EXISTING WALL/COLUMN CONSTRUCTION TO REMAIN
- EXISTING FLOOR ELEVATION
- MATCHLINE

8' 0' 8' 16'
SCALE OF FEET

A/E FIRM	DESIGNED:	SUB SHEET NO.	TITLE OF SHEET	DRAWING NO.
PRIME: QUINN EVANS ARCHITECTS WASHINGTON, DC	CE / CADD AM / TECH. REVIEW: DC / DATE: 03/15/2011	AD2	DEMOLITION PLAN - MUSEUM LEVEL NORTH	391 / 100042
			FRANKLIN COURT MUSEUM INDEPENDENCE NATIONAL HISTORICAL PARK	PMIS/PKG NO. 8384
				SHEET 23 OF 219

C:\Revit Local\20300129 Franklin Court - CENTRAL_bbarrett.rvt

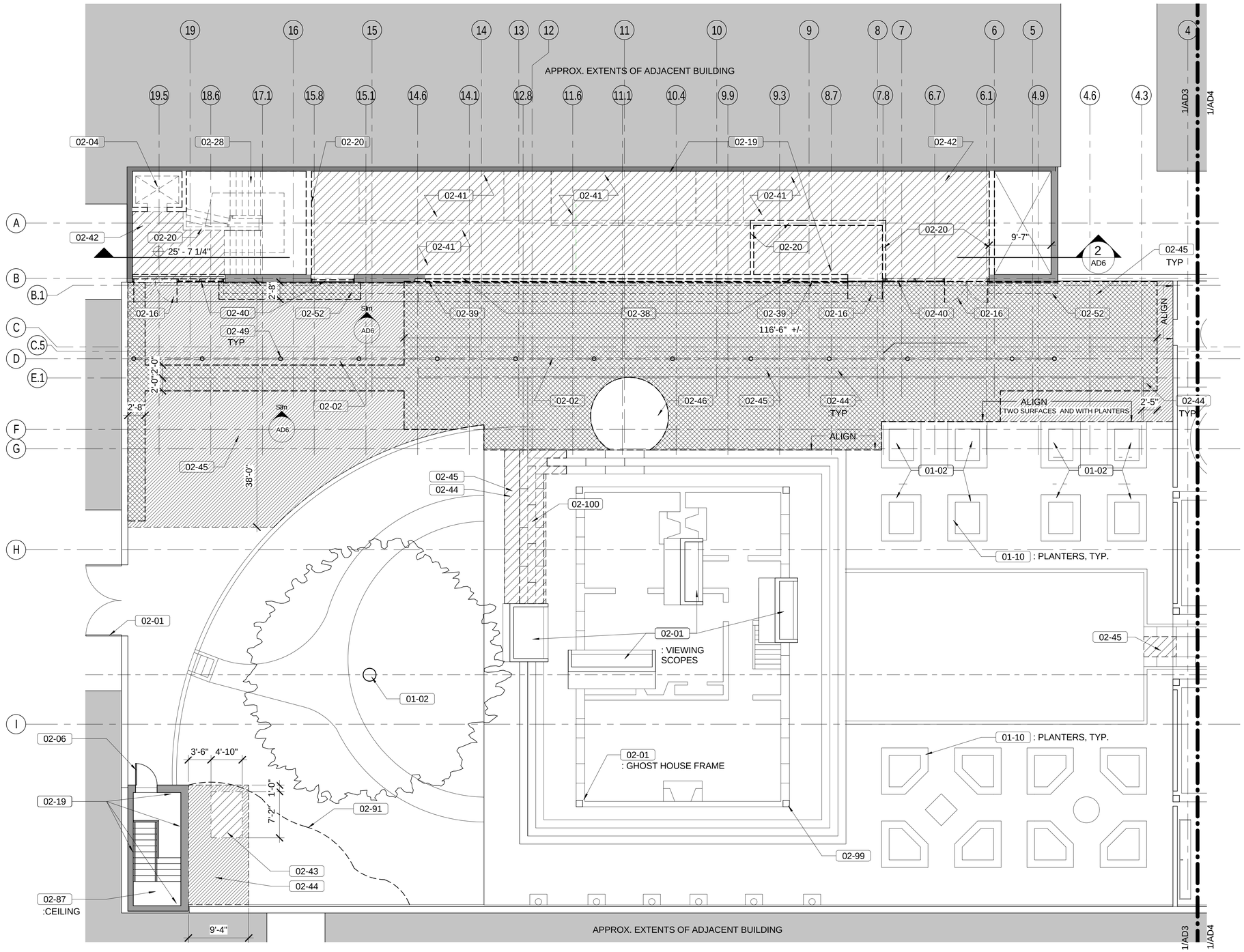

1 AD3 DEMOLITION PLAN - COURTYARD LEVEL - SOUTH

GENERAL NOTES

1. REFER TO SHEETS G4 AND G5 FOR MASTER KEYNOTE LIST
2. REFER TO HAZARDOUS DRAWINGS AND SPECIFICATIONS FOR LOCATIONS AND QUANTITIES OF HAZARDOUS MATERIALS TO BE REMOVED
3. REFER TO STRUCTURAL DRAWINGS AND NEW WORK DRAWINGS FOR COORDINATION OF DEMOLITION SCOPE
4. ARCHEOLOGICAL REMAINS TO BE PROTECTED AT ALL TIMES DURING CONSTRUCTION
5. SITE TREES TO BE PROTECTED AT ALL TIMES DURING CONSTRUCTION

KEY NOTES

01-02	PROVIDE TREE PROTECTION
01-10	PROVIDE PROTECTION for EXISTING SITE FEATURE
02-01	EXISTING ITEM TO REMAIN
02-02	REMOVE ITEM INDICATED
02-04	REMOVE ELEVATOR AND ALL ASSOCIATED EQUIPMENT AND APPURTENANCES, COMPLETE
02-06	EXISTING DOOR AND FRAME TO REMAIN
02-16	REMOVE EXISTING DOOR AND FRAME
02-19	REMOVE ALL FINISHES AND CLEAN EXPOSED CONCRETE
02-20	REMOVE EXISTING WALL
02-28	REMOVE CONCRETE STAIR ASSEMBLY; REFER TO STRUCTURAL DRAWINGS
02-38	SAWCUT WALL AS REQUIRED FOR OPENING; REFER TO STRUCTURAL DRAWINGS, DOOR SCHEDULE AND NEW WORK PLANS
02-39	REMOVE BRICK VENEER PAST OPENING; TOOTH IN MASONRY TO NEW OPENING DIMENSION; SALVAGE BRICK AS NECESSARY FOR NEW WORK
02-40	REMOVE EXISTING STOREFRONT
02-41	REMOVE EXISTING RAMP; REFER TO STRUCTURAL DRAWINGS
02-42	REMOVE EXISTING CONCRETE SLAB; REFER TO STRUCTURAL DRAWINGS
02-43	SAWCUT SLAB AS REQUIRED FOR OPENING; REFER TO STRUCTURAL DRAWINGS AND NEW WORK PLANS
02-44	REMOVE EXISTING FILL WITHIN EXTENTS OF NEW WORK AND AS NECESSARY TO PERFORM NEW WORK
02-45	REMOVE EXISTING PAVERS WITHIN EXTENTS OF NEW WORK AND AS NECESSARY TO PERFORM NEW WORK. SALVAGE PAVERS AS NECESSARY FOR NEW WORK
02-46	EXISTING PAVER PATTERN TO REMAIN; REMOVE AND REINSTALL AS NECESSARY TO PERFORM NEW WORK
02-49	REMOVE EXISTING POST, BEAMS, AND BASE ATTACHMENT; PATCH ROOF AT REMOVED ATTACHMENT; REMOVE PAVERS AS REQUIRED AND REPLACE TO MATCH SURROUNDING PAVER PATTERN
02-52	REMOVE EXISTING BENCH; CLEAN AND POINT EXISTING MASONRY BEYOND TO MATCH EXISTING; REPLACE PAVERS AS NECESSARY TO MATCH EXISTING PATTERN
02-87	REPAIR WATER DAMAGE
02-91	REMOVE EXISTING LANDSCAPING
02-99	PREPARE GHOST HOUSE FRAME TO RECEIVE NEW PAINT; COMPLETE
02-100	REMOVE EXISTING GRANITE STEPS AND SALVAGE FOR REUSE; NUMBER AND DOCUMENT EACH STONE

LEGEND

- EXISTING PAVERS TO BE REMOVED
- EXISTING PAVERS, CONCRETE AND FILL TO BE REMOVED
- EXISTING FLOOR SLAB TO BE REMOVED
- EXISITING WALL/COLUMN TO BE REMOVED
- EXISTING WALL/COLUMN CONSTRUCTION TO REMAIN
- EXISTING FLOOR ELEVATION
- MATCHLINE

8' 0' 8' 16'
SCALE OF FEET

A/E FIRM	DESIGNED:	SUB SHEET NO.	TITLE OF SHEET	DRAWING NO.
PRIME: QUINN EVANS ARCHITECTS WASHINGTON, DC	CE CADD TLW	AD3	DEMOLITION PLAN - COURT LEVEL SOUTH	391 100042
	TECH. REVIEW: DC		FRANKLIN COURT MUSEUM INDEPENDENCE NATIONAL HISTORICAL PARK	PMIS/PKG NO. 8384
	DATE: 03/15/2011			SHEET 24 OF 219

C:\Revit Local\20090129 Franklin Court - CENTRAL_mvaismek.rvt