STATE	PROJECT	SHEET NUMBER
AK	PRA-DENA 10(27)	E.1

ITEM 15705-0100 SOIL EROSION CONTROL, SILT FENCE		
LOCATION	Lt/Rt	QUANTITY (lnft)
4176+00 to 4178+80	Rt	280
4322+40 to 4323+00	Lt	70
4501+96 to 4502+50	Lt	65
	TOTAL	415

NPS Pkg. No. 101156A, B, C, &D NPS Drwg. Nos. 184/80251

TABULATION OF QUANTITIES

Date
Checked by: --/----
Bill McQuiston
Designed by:
23-FEB-2009 3:18PM
IP_PWP:dms04345\dena1027ra.dgn [US_Int2D]

STATE	PROJECT	SHEET NUMBER
AK	PRA-DENA 10(27)	E.2

NOTE:

1. Use drainage ditch installation for low flow conditions only when specified on Erosion Control Plan.
2. Alternate preassembled silt fence options (geotextile, type V-B) will be allowed as long as specified dimensions are satisfied. Follow manufacturer's recommendations for installation procedures. All types must ensure silt fence remains attached to, and does not slide down, supporting posts.
3. Install silt fence along ground contours. Curve ends of silt fence upgrade to prevent water from running around the ends.
4. 10 ft. (max.) spacing with fence support.
   6 ft. (max.) spacing without fence support.

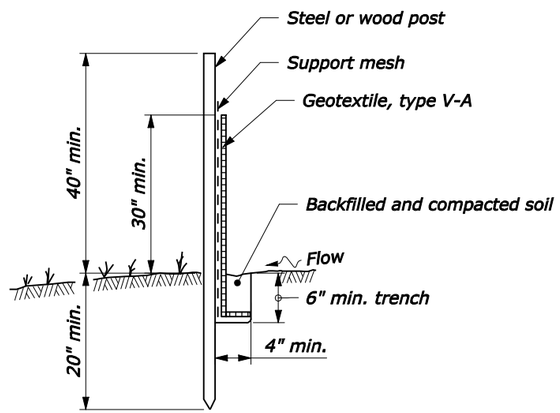

POST AND GEOTEXTILE INSTALLATION DETAIL

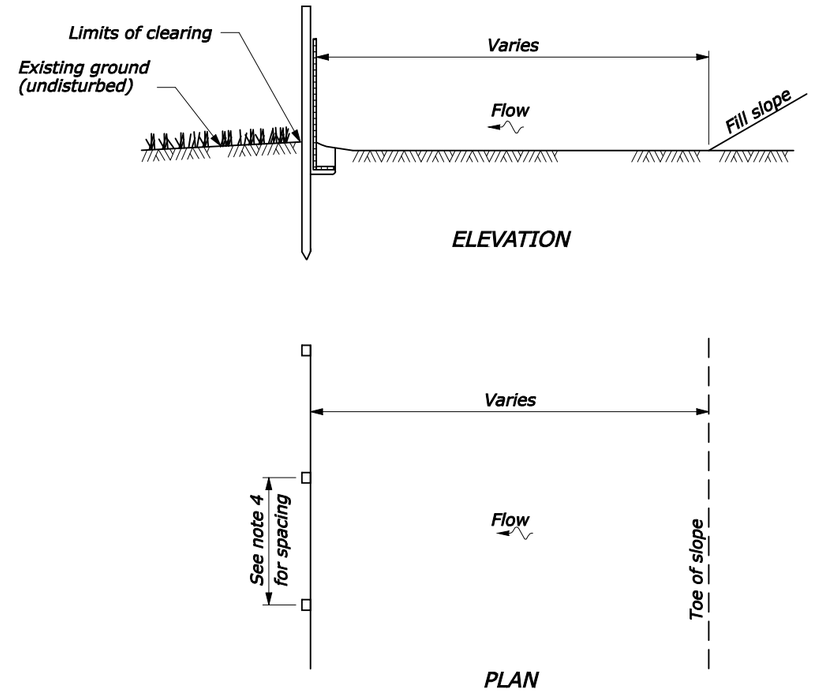

SILT FENCE INSTALLATION AT TOE OF FILL

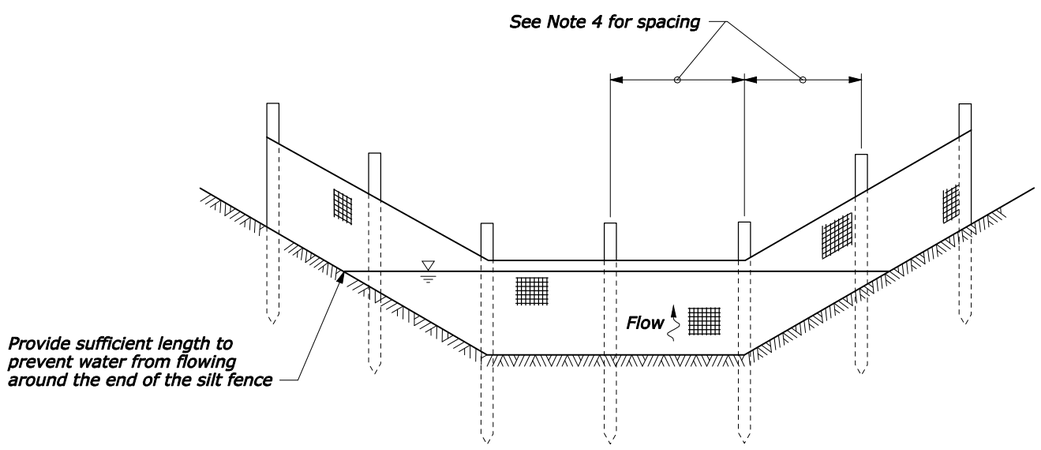

SILT FENCE INSTALLATION IN A DRAINAGE DITCH

See Note 1

NO SCALE

U.S. DEPARTMENT OF TRANSPORTATION
FEDERAL HIGHWAY ADMINISTRATION
FEDERAL LANDS HIGHWAY

U.S. CUSTOMARY STANDARD

SILT FENCE

STANDARD APPROVED FOR USE 6/2005

REVISED:
DRAFT: 10/2006

STANDARD
157-1

23-FEB-2009 4:56PM
IP_PWP:dms04345\dena1027rb.dgn [US Customary]

STATE	PROJECT	SHEET NUMBER
AK	PRA-DENA 10(27)	F.1

QUANTITIES

ITEM	DESCRIPTION	QUANTITY	ESTIMATING VALUE	REMARK
15705-0100	Soil Erosion Control, Silt fence	1200 lnft		See Sheet E.2 for details
31101-0000	Stockpiled aggregate, aggregate surfacing	23640 ton	Based on 1.9 t/cuyd	Includes 8165 tons for Aggregate Surface Course
31101-0000	Stockpiled aggregate, select borrow	15760 ton	Based on 1.9 t/cuyd	

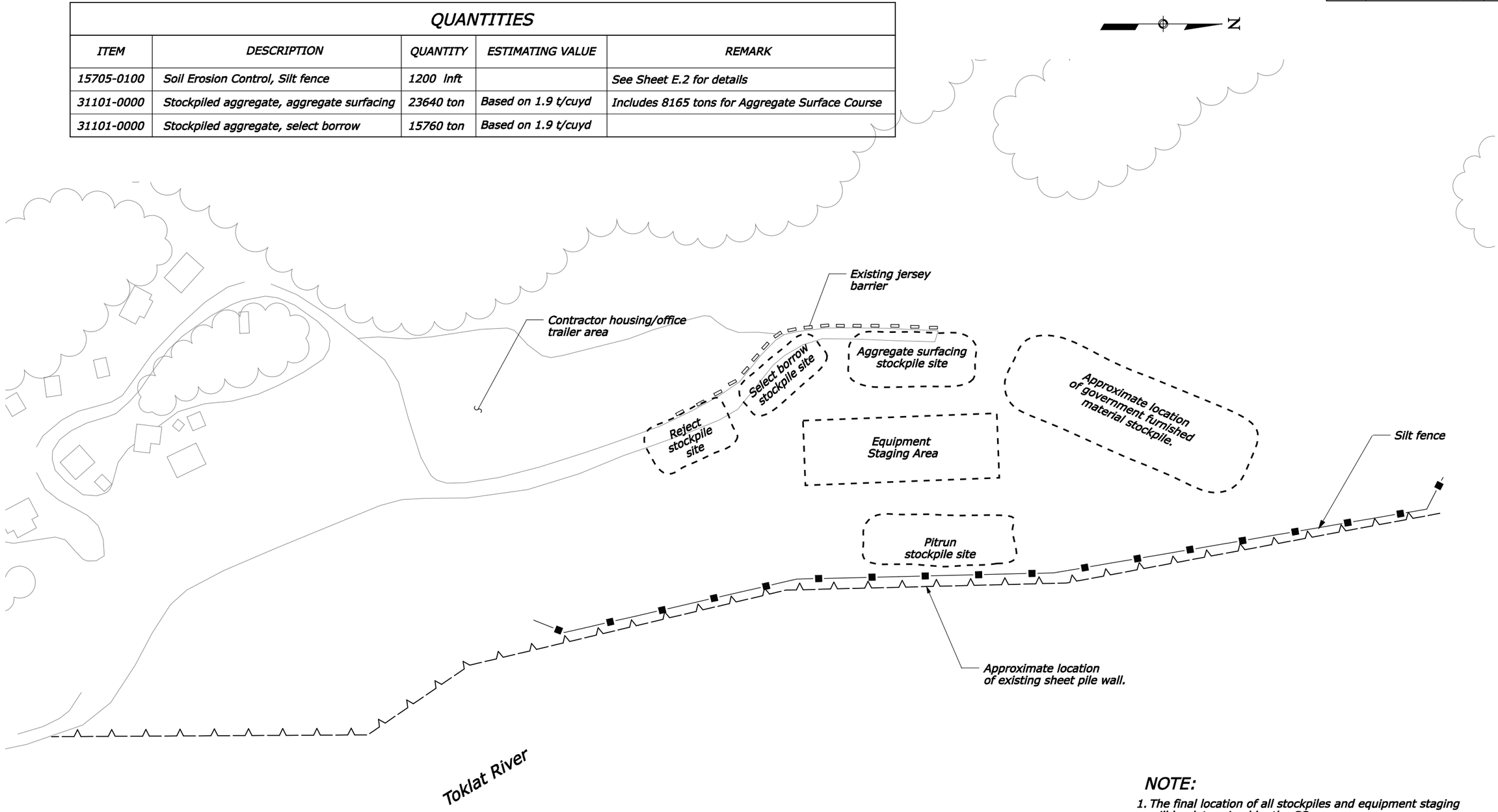

NOTE:

1. The final location of all stockpiles and equipment staging will be determined by the CO.
2. Large stockpiles for mixing fines will be available throughout construction.

NPS Pkg. No. 101156A, B, C, &D NPS Drwg. Nos. 184/80251

Scale in feet

50 0 50 100 150 200

TOKLAT PIT OPERATION PLAN

Designed by: W. McQuiston 5/2005 | Checked by: R. Johnson 02/2009

23-FEB-2009 3:18PM IP_PWP:dms04346\dena1027ma.dgn [US_Int2D]

STATE	PROJECT	SHEET NUMBER
AK	PRA-DENA 10(27)	F.2

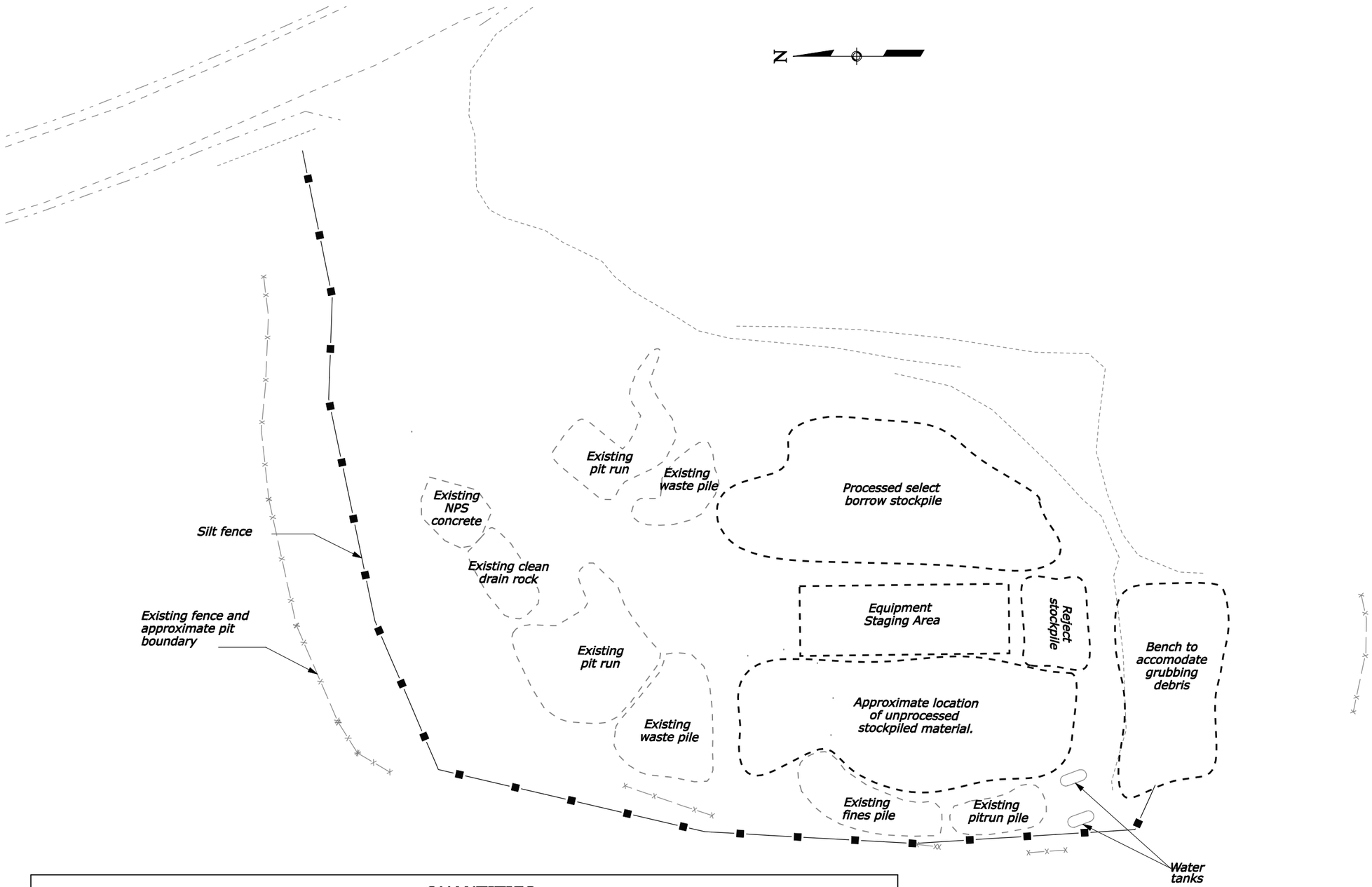

QUANTITIES

ITEM	DESCRIPTION	QUANTITY	ESTIMATING VALUE	REMARK
15705-0100	Soil Erosion Control, Silt fence	550 lnft		See Sheet E.2 for details
31101-0000	Stockpiled aggregate, aggregate surfacing	0 ton	Based on 1.9 t/cuyd	
31101-0000	Stockpiled aggregate, select borrow	37000 ton	Based on 1.9 t/cuyd	

Scale in feet

20 0 20 40 60 80

NOTE:

1. The final location of all stockpiles and equipment staging will be determined by the CO.

NPS Pkg. No. 101156A, B, C, &D NPS Drwg. Nos. 184/80251

70 MILE PIT (BEAVER POND PIT) OPERATION PLAN

Designed by: W. McQuiston 5/2005 | Checked by: R. Johnson 02/2009

23-FEB-2009 4:06PM

IP_PWP:dms04346\dena1027mb.dgn [US_Int2D]

STATE	PROJECT	SHEET NUMBER
AK	PRA-DENA 10(27)	F.3

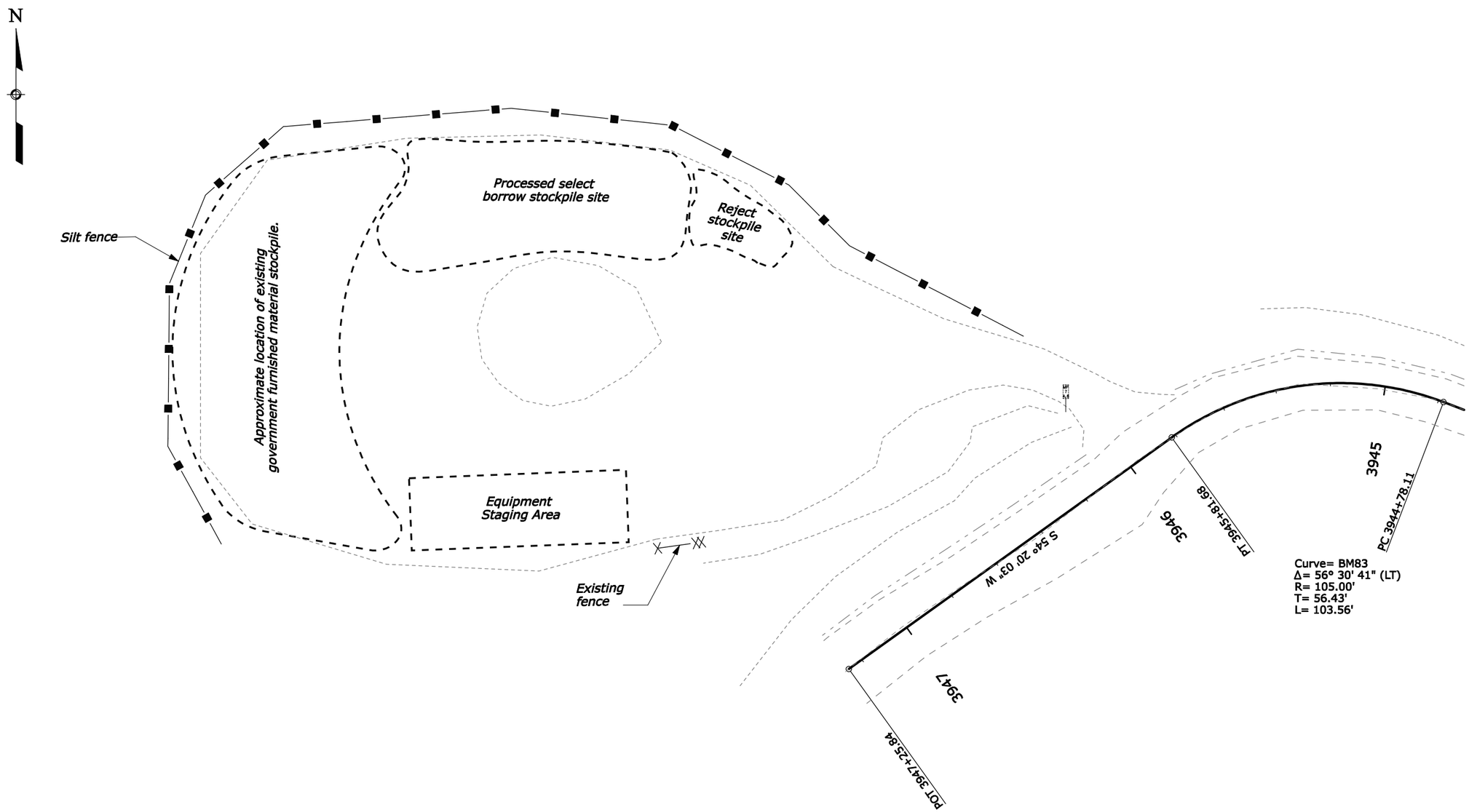

NOTE:

1. The final location of all stockpiles and equipment staging will be determined by the CO.

NPS Pkg. No. 101156A, B, C, &D NPS Drwg. Nos. 184/80251

QUANTITIES

ITEM	DESCRIPTION	QUANTITY	ESTIMATING VALUE	REMARK
15705-0100	Soil Erosion Control, Silt fence	500 lnft		See Sheet E.2 for details
31101-0000	Stockpiled aggregate, borrow material	4797 ton	Based on 1.9 t/cuyd	

Scale in feet

20 0 20 40 60 80

MOOSE CREEK PIT (MILE 74.8 PIT) OPERATION PLAN

IP_PWP:dms04346\dena1027mc.dgn [US_Int2D] 23-FEB-2009 5:02PM Designed by: W. McQuiston 5/2005 Checked by: --/----

Note: The quantities shown hereon are approximate and are subject to field adjustments.

TABULATION OF DRAINAGE QUANTITIES

STATE	PROJECT	SHEET NUMBER
AK	PRA-DENA 10(27)	G.1

PAY ITEM NUMBER				20301			25101		60201					60213	60401	60403	60701	60704	60707		60801		Allow. Pipe Material (See key below)	BEVELS 1V:nH		FOOTNOTES See below for numbered footnotes
				-1200	-1400	-1900	-4000	-2000	-0600	-0800	-1000	-1200	-1600	-100	-0000	-1200	-1000	-0000	-0500	-0600	-0200					
STATION	EST MAX COVER (ft)	STR EXC (CUYD)	BEDDING MATERIAL (CUYD)	Removal (Each)			Placed riprap, energy dissapator (CUYD)		Pipe Culvert (LNFT)					Branch Connec-tion (Each)	Manhole (Each)	Inlet type 5A (Each)	Removing, cleaning, and stockpiling culvert (Each)	Cleaning culverts in place (Each)	Lining pipe culvert (LNFT)		Paved water-way, type 2 (Each)			Lt	Rt	
DIAMETER or SPAN x RISE (inch)				Head-wall	Inlet	Pipe Culverts	Class 4		18 inch	24 inch	36 inch	48 inch	72 inch													
3880+79.09	5.7	40.4	4.2			1				45													AS			
3884+23.41	3.5	34.4	3.5			1				38													AS			
3895+40.69	2.3	23.9	3.2			1				35													AS			
3899+62.46	2.8	19.2	2.2			1				24													AS			
3902+92.25	2.4	26.0	2.8			1				30													AS			
3907+51.91	5.4	34.2	3.9			1				42													AS			
4165+28.92	12.0	134.1	7.7			1					69												AS			
4178+47.02	5.2	31.4	3.7			1				40													AS			
4207+28.64	8.6	109.0	7.4			1	9					57											AS			
4213+21.00	2.5	36.0	2.8							30													AS			
4214+91.48	3.2	30.4	3.4			1				37													AS			
4220+20.00	2.4	23.5	3.2							35													AS			
4227+25.36	9.1	116.4	6.9			1	9					53											AS			
4251+13.00	3.3	41.7	3.3							36													AS			
4256+35.31	2.8	25.9	3.2			1				35													AS			
4278+50.00	2.2	21.0	3.4							37													AS			
4285+65.91	2.2	22.2	3.0			1				32													AS			
4286+65.29	2.3	22.7	3.0			1				32													AS			
4293+71.86	4.2	33.6	3.7			1				40													AS			
4308+70.59	2.9	40.9	4.9			1					44												AS			
4308+78.27	11.0	262.9	12.2			1	85						76										AS			
4312+95.00 to 4313+95	1.6	48.1	7.4						100														AS			
4316+14.00	2.6	38.5	5.0							54													AS			
4322+65.00	2.4	18.3	3.1							34													AS			
4322+69.54	6.1	79.3	4.6			1	114			56													AS			1
4334+35.00	2.6	22.4	3.6							39													AS			
4347+13.45	3.2	23.7	3.2			1				32													AS			
4362+42.34	3.4	31.5	3.5			1				38													AS			
4373+09.52	5.5	49.3	4.2			1				45													AS			
4383+46.81	11.7	102.1	6.4			1				69													AS			
4412+01.14	4.5	29.8	3.4			1				37													AS			
4414+60.00	1.7	19.4	2.7							29													AS			
4489+76.01	2.8	23.2	2.8			1				30													AS			
PROJECT TOTAL		**1615.4**	**141.5**	**0**	**0**	**24**	**217**	**0**	**100**	**1031**	**113**	**110**	**76**	**0**	**0**	**0**	**0**	**0**	**0**	**0**	**0**	**0**				

NOTE:

1. Structural excavation and bedding material quantities are provided for information only. Do not measure for direct payment.
2. The quantities show above are approximate and are subject to field adjustments.
3. Aluminized steel pipe culvert minimum wall thickness is the larger of 0.064" or thethickness required by the Std. 602-1 fill height table (steel).
4. Plastic pipe is not allowed.

FOOTNOTE:

1. Install beaver deterrent device, See Sheet G.3 for details.

Allowable pipe culvert material

AS Aluminized steel

--/---
A. Ahola
Checked by:
11/2008
W. McOuiston
Designed by:
23-Feb-2009 1:57
C:\MyFiles\Projects\Alaska\Denali National Park Road\Mile 80-84

STATE	PROJECT	SHEET NUMBER
AK	PRA-DENA 10(27)	G.2

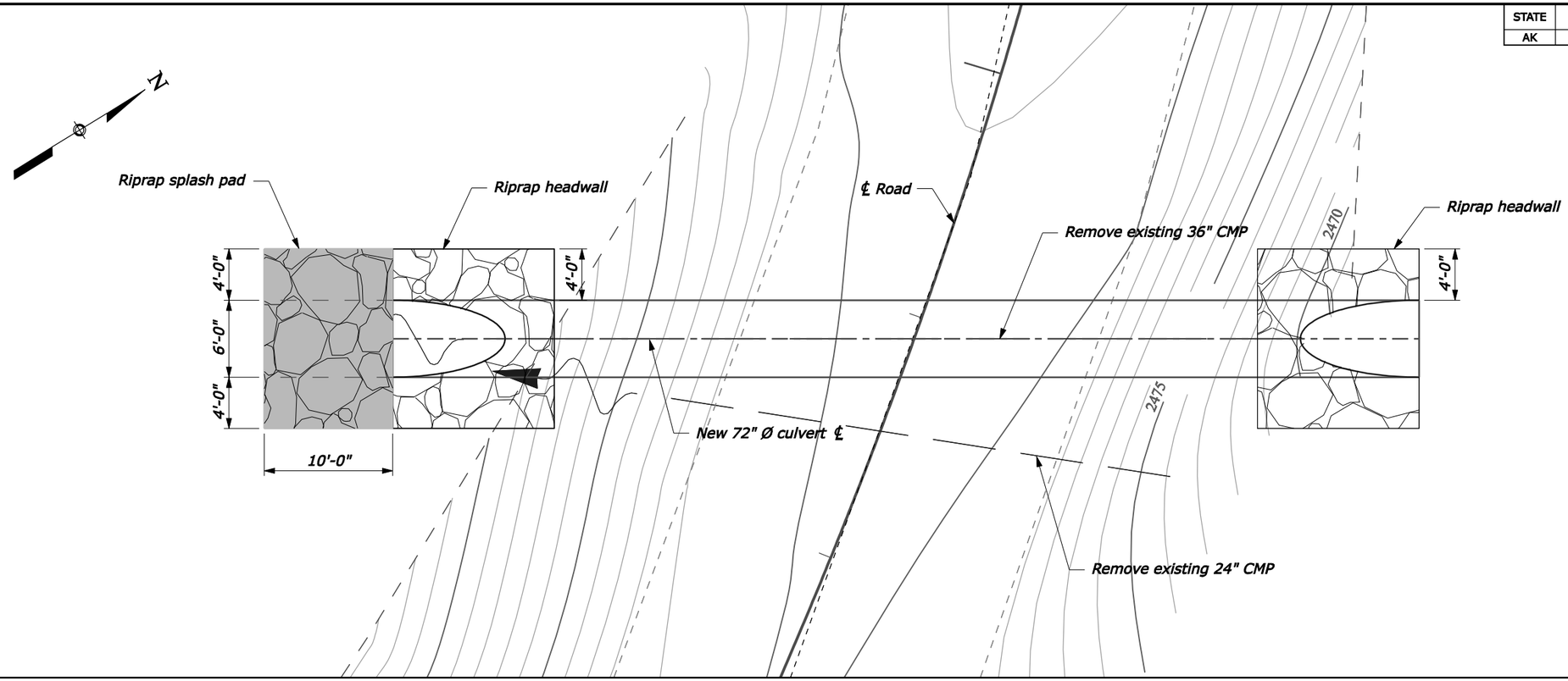

SACLE 1"= 10'

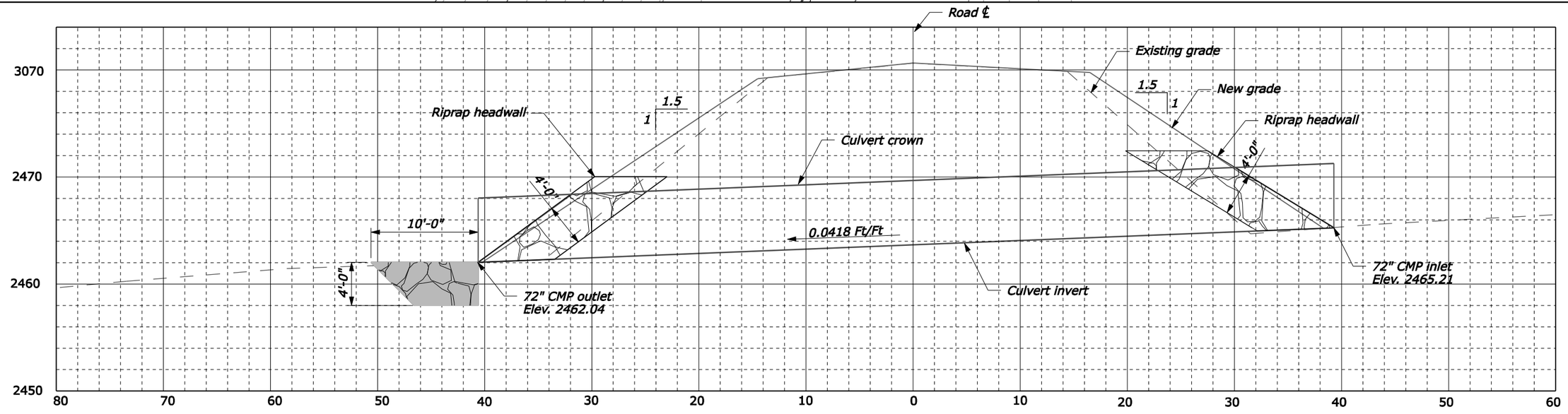

HYDRAULIC INFORMATON

Q_2 = 24 CFS HW_2 = 1.5 FT Riprap Splash Pad
Q_{50}= 88 CFS HW_{50}= 5.6 FT

4308+78 CULVERT PLAN AND PROFILE

02/2009 S. Leon Checked by: 02/2009 S. Leon Designed by: _DATE_ " + " _FILE_

C:\MyFiles\PW_Production\dms04364\4308+78 culvert layout-2.dgn

STATE	PROJECT	SHEET NUMBER
AK	PRA-DENA 10(27)	G.3

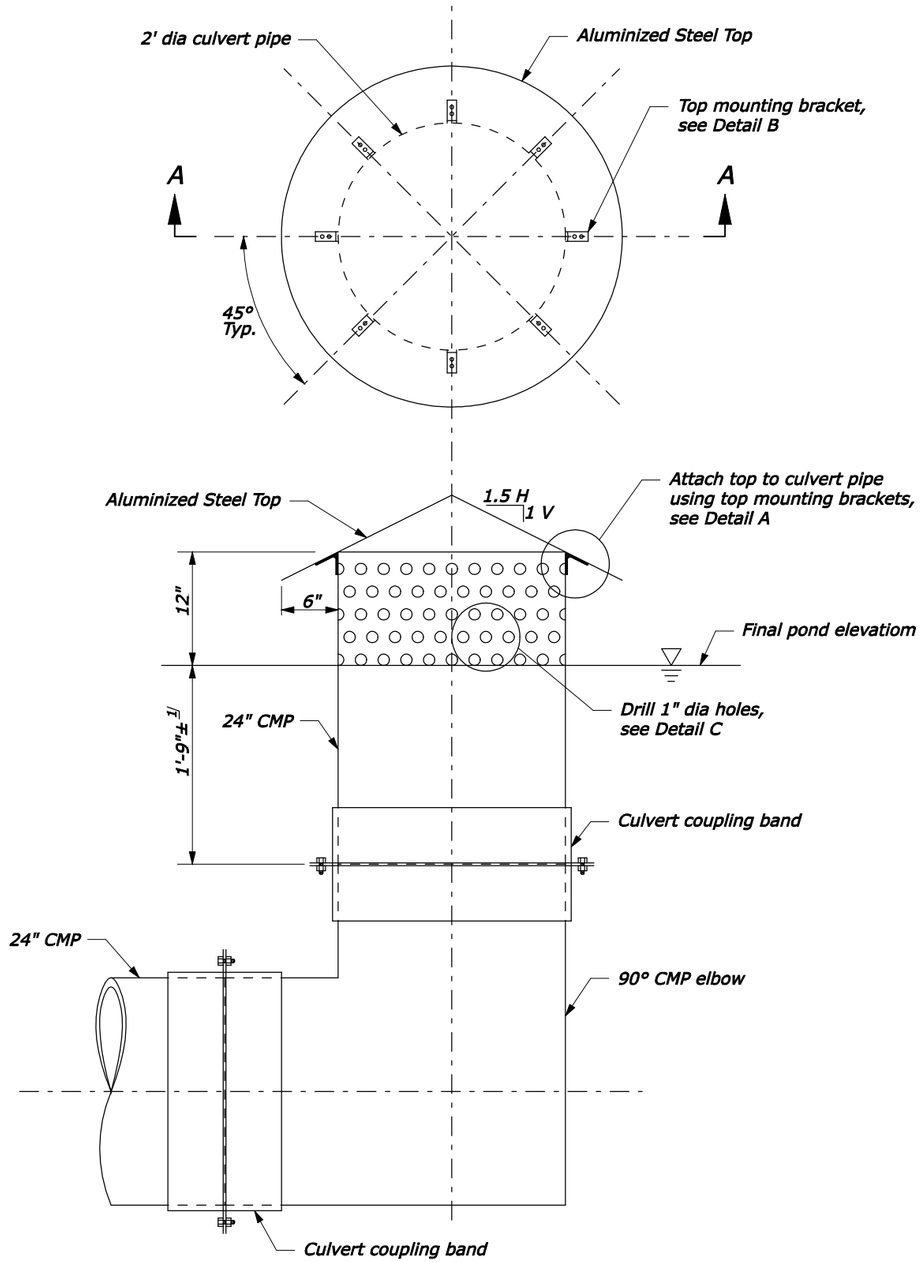

SECTION A-A

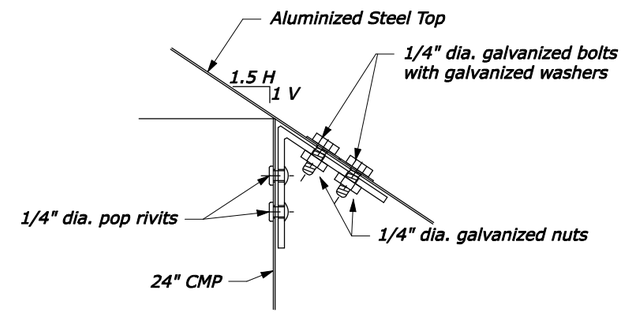

Detail A

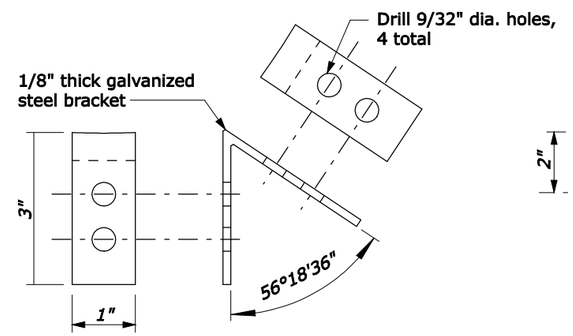

Detail B

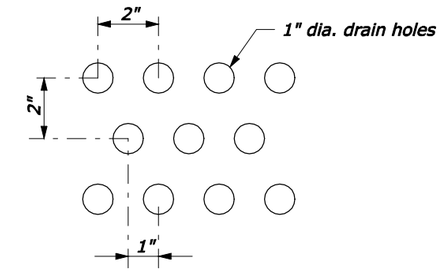

Detail C

NOTE:

1. *Adust locations of mounting brackets as necessary to avoid drain holes.*

FOOTNOTE:

1/ *Adjust height to obtain final pond elevation established by Park.*

NPS Pkg. No. 101156A, B, C, &D NPS Drwg. Nos. 184/80251

No Scale

BEAVER DETERRENT DEVICE DETAILS

02/2009 Checked by: R. Johnson 02/2009 Bill McQuiston Designed by: 23-FEB-2009 3:18PM IP_PWP:dms0347\dena1027eb.dgn [US_Int2D]

STATE	PROJECT	SHEET NUMBER
AK	PRA-DENA 10(27)	G.4

METAL ROUND PIPE CULVERT

FILL HEIGHT AND METAL THICKNESS TABLE FOR HELICAL LOCKSEAM AND WELDED SEAM PIPE CULVERT

STEEL

PIPE SIZE DIAMETER INCHES	MINIMUM COVER INCHES	2⅔" x ½" CORRUGATIONS					3" x 1" CORRUGATIONS					5" x 1" CORRUGATIONS				
		METAL THICKNESS (INCH/GAGE)														
		0.064/16	0.079/14	0.109/12	0.138/10	0.168/8	0.064/16	0.079/14	0.109/12	0.138/10	0.168/8	0.064/16	0.079/14	0.109/12	0.138/10	0.168/8
		MAXIMUM FILL HEIGHT ABOVE TOP OF PIPE (FEET)														
12	12	100	100	100	100	100										
15	12	100	100	100	100	100										
18	12	100	100	100	100	100										
21	12	100	100	100	100	100										
24	12	100	100	100	100	100										
30	12	85	100	100	100	100										
36	12	71	89	100	100	100	81	100	100	100	100					
42	12	61	76	100	100	100	70	87	100	100	100					
48	12	53	66	93	100	100	61	76	100	100	100	54	68	95	100	100
54	12		59	83	100	100	54	68	95	100	100	48	60	85	100	100
60	12			74	97	100	49	61	86	100	100	43	54	76	98	100
66	12				87	100	44	55	78	100	100	39	49	69	89	100
72	12				80	97	40	51	71	92	100	36	45	63	82	100
78	12					87	37	47	66	85	100	33	42	58	75	92
84	12					75	35	43	61	78	96	31	39	54	70	86
90	12						32	40	57	73	90	29	36	51	65	80
96	12							38	53	69	84		34	48	61	75
102	18							36	50	65	79		32	45	57	71
108	18								47	61	75			42	54	67
114	18								45	58	71			40	52	63
120	18								43	55	67			38	49	60
126	18									52	64				47	57
132	18									50	61				44	54
138	18									48	58				42	52
144	18										56					50

ALUMINUM

PIPE SIZE DIAMETER INCHES	MINIMUM COVER INCHES	2⅔" x ½" CORRUGATIONS					3" x 1" CORRUGATIONS				
		METAL THICKNESS (INCH/GAGE)									
		0.060/16	0.075/14	0.105/12	0.135/10	0.164/8	0.060/16	0.075/14	0.105/12	0.135/10	0.164/8
		MAXIMUM FILL HEIGHT ABOVE TOP OF PIPE (FEET)									
12	12	100	100	100	100	100					
15	12	100	100	100	100	100					
18	12	100	100	100	100	100					
21	12	88	100	100	100	100					
24	12	77	97	100	100	100					
30	12	62	77	100	100	100	71	89	100	100	100
36	12	52	64	90	100	100	59	74	100	100	100
42	12	44	55	77	99	100	51	64	89	100	100
48	12			67	87	100	44	56	78	100	100
54	18			54	71	88	39	50	69	93	100
60	18				57	72	35	45	62	83	98
66	18					58	32	40	56	76	89
72	18					45	30	37	55	70	82
78	24							34	48	64	75
84	24								44	59	70
90	24								41	62	65
96	24								38	51	61
102	24									46	55
108	24									42	50
114	24										45
120	24										40

NOTE:

1. When directed, camber pipe culverts upward from a chord through the inlet and outlet inverts an ordinate amount equal to 1% of the pipe length. Develop camber on a parabolic curve. If the midpoint elevation on the parabolic curve as designed exceeds the elevation of the inlet invert, reduce the amount of camber or increase the pipe culvert gradient.
2. Fill heights exceeding 100 feet require special analysis by the CO.
3. The fill heights in the table are for helical lockseam and welded seam pipe only. Fill heights for culvert pipe with annular corrugations are more restrictive than those of helical lockseam and welded seam pipe. Obtain approval before furnishing annular corrugation pipe.
4. Measure minimum cover from the top of the pipe culvert to the subgrade for flexible pavements, and to the top of the pavement for rigid pavements. Measure maximum fill height from the top of the pipe to the top of the pavement for both flexible and rigid pavement.

METAL PIPE ARCH CULVERT

FILL HEIGHT AND METAL THICKNESS TABLE FOR HELICAL LOCKSEAM AND WELDED SEAM PIPE CULVERT

STEEL

PIPE ARCH SIZE SPAN x RISE INCHES	EQUI-VALENT DIAMETER INCHES	MINIMUM CORNER RADIUS INCHES	MINIMUM COVER INCHES	2⅔" x ½" CORRUGATIONS					3" x 1" CORRUGATIONS				5" x 1" CORRUGATIONS			
				METAL THICKNESS (INCH/GAGE)												
				0.064/16	0.079/14	0.109/12	0.138/10	0.168/8	0.079/14	0.109/12	0.138/10	0.168/8	0.079/14	0.109/12	0.138/10	0.168/8
				MAXIMUM FILL HEIGHT ABOVE TOP OF PIPE (FEET)												
17 x 13	15	3	12	13												
21 x 15	18	3	12	12												
24 x 18	21	3	12	13												
28 x 20	24	3	12	13												
35 x 24	30	3	12	12												
42 x 29	36	3.5	12	12												
49 x 33	42	4	12		12											
57 x 38	48	5	12			12										
60 x 46	54	8	15							21				21		
64 x 43	54	6	12			12										
66 x 51	60	9	15							21				21		
71 x 47	60	7	12				12									
73 x 55	66	12	18							20				20		
77 x 52	66	8	12					12								
81 x 59	72	14	18						17				17			
83 x 57	72	9	12					12								
87 x 63	78	14	18						17				17			
95 x 67	84	16	18						17				17			
103 x 71	90	16	18							17			17			
112 x 75	96	18	21							16				16		
117 x 79	102	18	21							16				16		
128 x 83	108	18	24								16				16	
137 x 87	114	18	24								16				16	
142 x 91	120	18	24									16				16

ALUMINUM

PIPE ARCH SIZE SPAN x RISE INCHES	EQUI-VALENT DIAMETER INCHES	MINIMUM CORNER RADIUS INCHES	MINIMUM COVER INCHES	2⅔" x ½" CORRUGATIONS				3" x 1" CORRUGATIONS			
				METAL THICKNESS (INCH/GAGE)							
				0.060/16	0.075/14	0.105/12	0.135/10	0.060/16	0.075/14	0.105/12	0.135/10
				MAXIMUM FILL HEIGHT ABOVE TOP OF PIPE (FEET)							
17 x 13	15	3	12	13							
21 x 15	18	3	12	12							
24 x 18	21	3	12	13							
28 x 20	24	3	12		13						
35 x 24	30	3	12		12						
42 x 29	36	3.5	15			12					
49 x 33	42	4	15			12					
57 x 38	48	5	15				12				
60 x 46	54	8	15					21			
64 x 43	54	6	18				12				
66 x 51	60	9	18					21			
73 x 55	66	12	18						20		
81 x 59	72	14	21							17	
87 x 63	78	14	21							17	
95 x 67	84	16	24							17	
103 x 71	90	16	24								17

NO SCALE

U.S. DEPARTMENT OF TRANSPORTATION
FEDERAL HIGHWAY ADMINISTRATION
FEDERAL LANDS HIGHWAY

U.S. CUSTOMARY STANDARD

METAL PIPE CULVERT

STANDARD APPROVED FOR USE 12/1993
REVISED: 4/1994 6/2005

STANDARD
602-1

23-FEB-2009 3:19PM
IP_PWP:dms04347\st60201.dgn [US Customary]

STATE	PROJECT	SHEET NUMBER
AK	PRA-DENA 10(27)	G.5

COUPLING BANDS FOR METAL PIPE CULVERT 1/

CORRUGATION SIZE 2/ INCHES	ROUND PIPE DIAMETER INCHES	PIPE ARCH SPAN x RISE INCHES	MINIMUM BAND WIDTH (INCHES) ANNULAR CORRUGATED BANDS 3/	HELICALLY CORRUGATED BANDS 4/	SEMI-CORRUGATED BANDS 5/
1½ x ¼	underdrain 6/	-	10.5	7	10.5
2⅔ x ½	12 to 36	17 x 13 to 42 x 29	7	12	
	42 to 72	49 x 33 to 83 x 57	10.5	12	
	78 to 84	-	10.5	12	10.5
3 x 1	36 to 72	60 x 46 to 81 x 59	12	14	10.5
	78 to 144	87 x 64 to 142 x 91	12	14	10.5
5 x 1	36 to 72	60 x 46 to 81 x 59	20	22	
	78 to 144	87 x 64 to 142 x 91	20	22	

1/ Fabricate annular, helical and semi-corrugated type coupling bands from the same metal as the connecting pipe. Provide coupling bands not more than 3 nominal sheet thicknesses thinner than the thickness of the pipe to be connected, and no thinner than 0.052 inch for steel or 0.048 inch for aluminum. Fasten coupling bands with the following diameter of bolt:
⅜" for 18" round culvert (21" x 15" pipe arch) or less
½" for 21" round culvert (24" x 18" pipe arch) or more

2/ For helically corrugated pipe with rerolled ends, the nominal corrugations size refers to the dimension of the end corrugation in the pipe.

3/ Use annular corrugated bands with pipes having annular corrugations or with helical pipe having rerolled end to form annular corrugations. A 10.5 inch band is acceptable on pipe ends rerolled with 2⅔" x ½" corrugations. A 12 inch band is acceptable on pipe ends rerolled with 3" x 1" pipe corrugations.

4/ Use helical corrugated bands with pipes having helically corrugated ends.

5/ The minimum band widths shown for 3" x 1" and 5" x 1" corrugated sizes apply to 2⅔" x ½" corrugations on rerolled pipe ends.

6/ Smooth sleeve-type couplers and flat bands may be used for pipe diameters of 12" or less. Use a matching metal having a nominal thickness of not less than 0.040 inch for steel, or 0.036 inch for aluminum, or a plastic with an equivalent strength to metal.

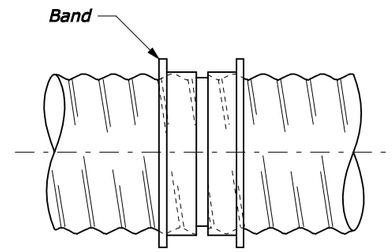

SLEEVE JOINT

Smoother sleeve with center stop.
Stab type joint

SMOOTH SLEEVE BAND

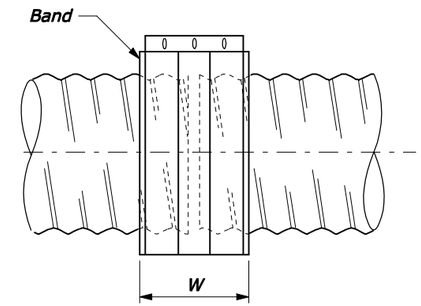

FLAT BAND

NOTE:

1. Watertight pipe joints are not required unless specified in the Special Contract Requirements.
2. Other types of coupling bands or fastening devices that comply with the joint performance criteria of AASHTO Standard specifications for Highway Bridges, Division II Section 26 may be used.

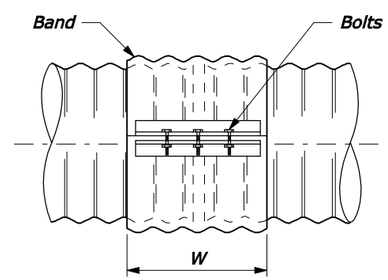

SIDE VIEW

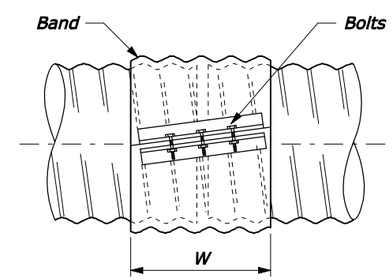

SIDE VIEW

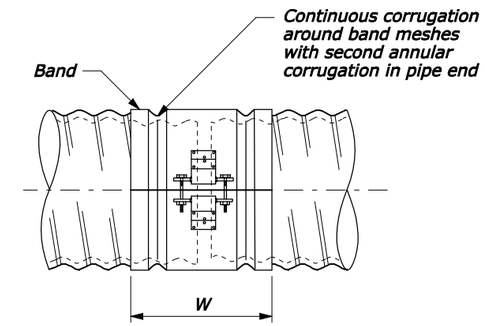

SIDE VIEW

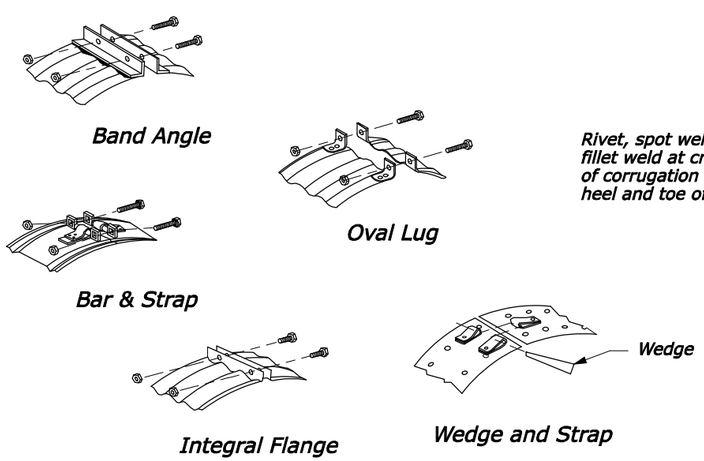

STANDARD BAND CONNECTIONS

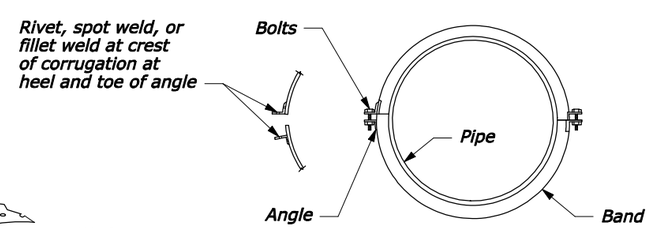

END VIEW

Second angle connection optional to 42" diameter, required above 42" diameter

ANNULAR BAND

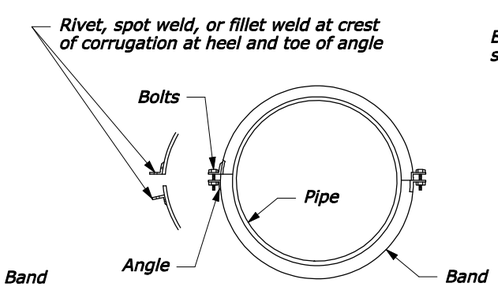

END VIEW

Second angle connection optional to 42" diameter, required above 42" diameter

HELICAL BAND

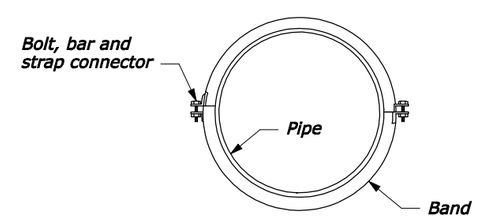

END VIEW

SEMI-CORRUGATED BAND

NO SCALE

U.S. DEPARTMENT OF TRANSPORTATION
FEDERAL HIGHWAY ADMINISTRATION
FEDERAL LANDS HIGHWAY

U.S. CUSTOMARY STANDARD

METAL PIPE CULVERT COUPLING BAND

STANDARD APPROVED FOR USE 12/1993
REVISED: 4/1994 6/2005

STANDARD 602-2

23-FEB-2009 3:19PM
IP_PWP:dms04347\st60202.dgn [US Customary]

STATE	PROJECT	SHEET NUMBER
AK	PRA-DENA 10(27)	G.6

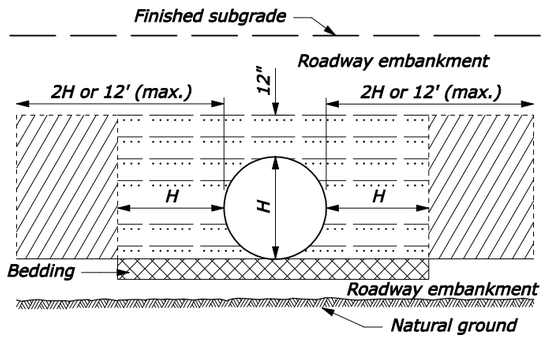

ABOVE NATURAL GROUND

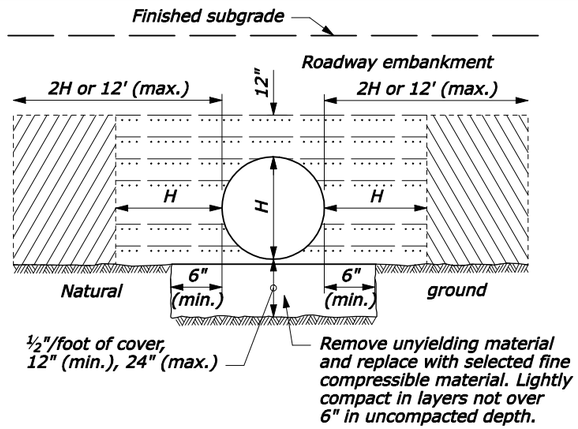

ON UNYIELDING MATERIAL

BEDDING DEPTH	
PIPE SIZE (H)	DEPTH
12" to 54"	4"
> 54"	6"

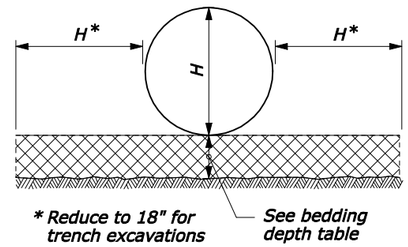

PIPE BEDDING

NOTE:

1. When directed, camber pipe culverts upward from a chord through the inlet and outlet inverts an ordinate amount equal to 1% of the pipe length. Develop camber on a parabolic curve. If the midpoint elevation on the parabolic curve as designed exceeds the elevation of the inlet invert, reduce the amount of camber or increase the pipe culvert gradient.
2. H equals the diameter of all round pipe culverts or the rise dimension of all pipe arch culverts.

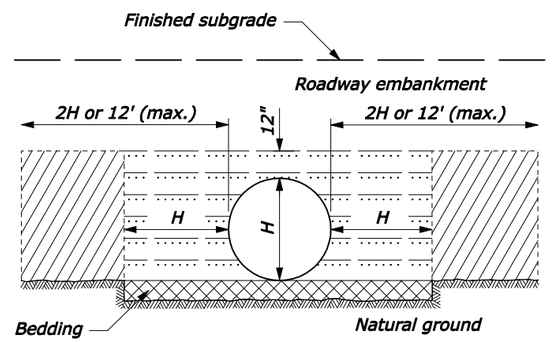

ON NATURAL GROUND

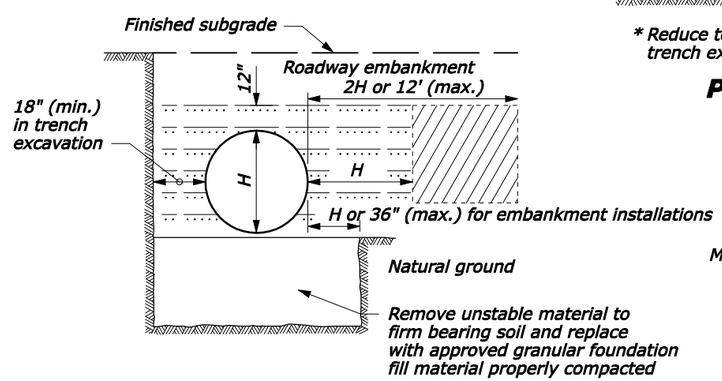

ON UNSTABLE MATERIAL

MINIMUM SPACING	
DIAMETER or SPAN	SPACING
UP to 48"	24"
48" and UP	Half diameter or span OR 36" whichever is less

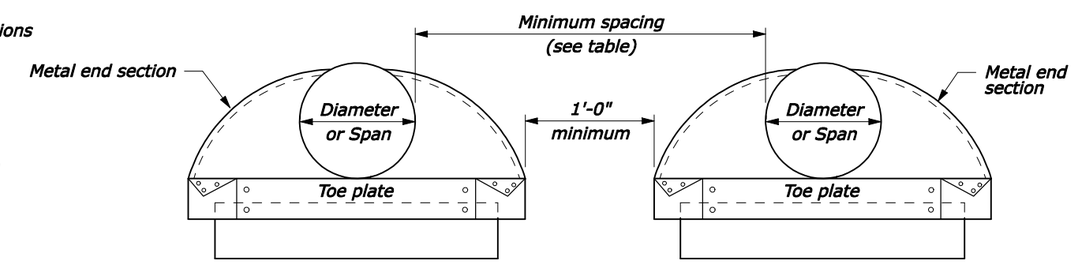

ELEVATION

MULTIPLE PIPE INSTALLATION

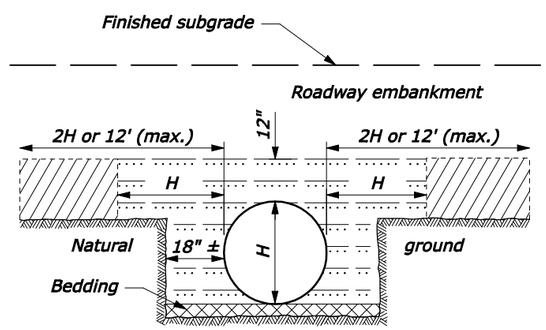

ABOVE AND BELOW NATURAL GROUND

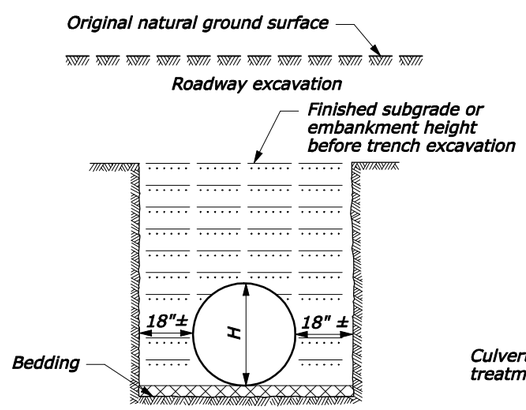

BELOW NATURAL GROUND OR TRENCH EXCAVATION IN EMBANKMENT

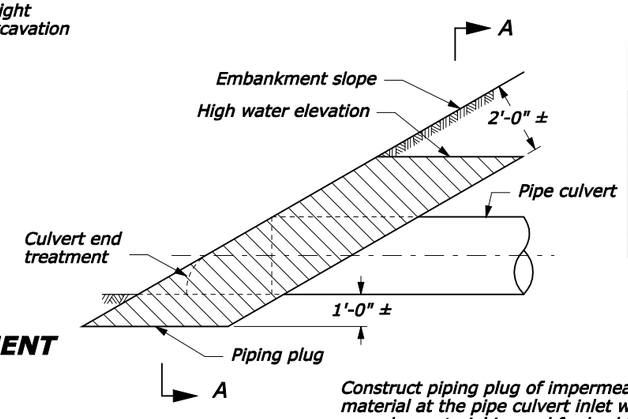

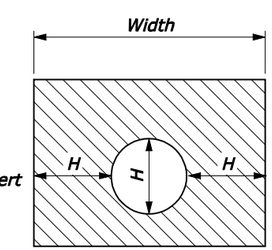

SECTION A-A

Construct piping plug of impermeable backfill material at the pipe culvert inlet where granular material is used for backfill. Width may be adjusted to tie into impervious material.

PIPING PLUG

NO SCALE

Bedding material (uncompacted)

Embankment material placed in layers not exceeding 6" compacted depth.

Compacted backfill material placed in layers not exceeding 6" compacted depth meeting the following:
Metal Pipe: Maximum particle size = 3"
Soil classification: A-1, A-2, or A-3
Plastic Pipe: Maximum particle size: 1½"
Soil classification: A-1, A-2-4, A-2-5, or A-3
Or lean concrete backfill in accordance with Section 614.

U.S. DEPARTMENT OF TRANSPORTATION
FEDERAL HIGHWAY ADMINISTRATION
FEDERAL LANDS HIGHWAY

U.S. CUSTOMARY STANDARD

METAL AND PLASTIC PIPE CULVERT BEDDING

STANDARD APPROVED FOR USE 12/1993
REVISED: 4/1994 6/2005

STANDARD 602-3

23-FEB-2009 3:19PM

JP_PWP:dms04347\st60203.dgn [US Customary]

STATE	PROJECT	SHEET NUMBER
AK	PRA DENA 10(27)	H.1

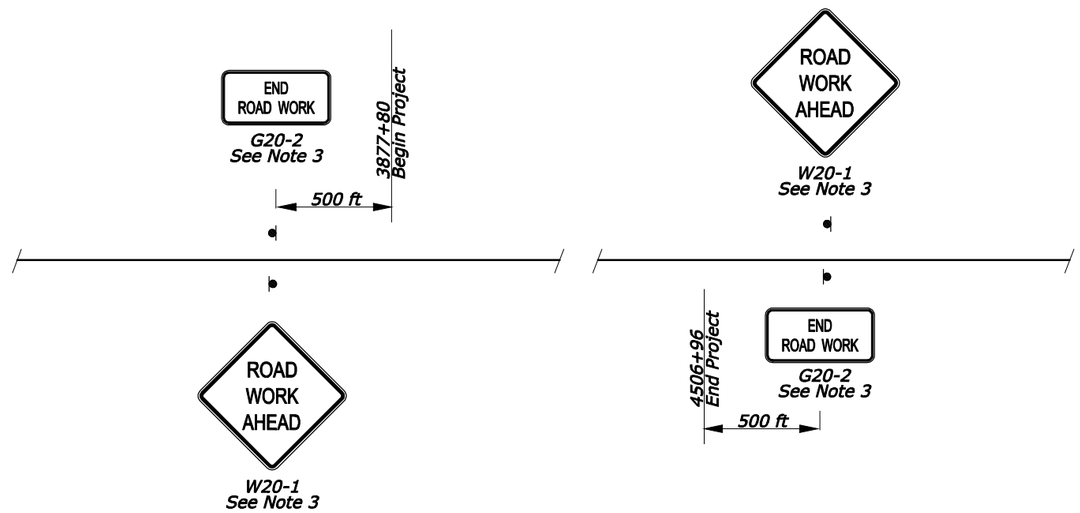

ADVANCED PROJECT SIGNING PLAN

SYMBOLS:

- Portable sign
- Post mounted
- W8-1 MUTCD No.
- Channelizing Device

SECTION 635 TEMPORARY TRAFFIC CONTROL QUANTITIES

ITEM NO.	DESCRIPTION	QUANTITY
63502-0400	Barricades, Type I 1/	6 each
63502-1250	Tubular marker, Type 42	50 each
63502-1500	Warning light, Type A 1/	4 each
63502-1700	Warning light, Type C 1/	8 each

TEMPORARY TRAFFIC CONTROL CONSTRUCTION SIGN ITEM 63504-1000

SIGN NUMBER	MUTCD NUMBER	DESCRIPTION	SIZE (in. x in.)	NO. OF SIGNS	QUANTITY (sq ft)
1	W20-1	ROAD WORK AHEAD	48 x 48	4	64
2	G20-2a	END ROAD WORK	36 x 18	4	18
3	W20-1	ROAD WORK 1500 FT	48 x 48	2	32
4	W20-4	ONE LANE ROAD AHEAD	18 x 48	2	12
5	W3-2A	YIELD AHEAD (SYMBOL)	36 x 36	1	9
6	R1-2	YIELD	36 x 36	1	9
				TOTAL	144

NOTE:

1. Final location and spacing of signs and devices may be changed to fit field conditions as approved by the CO.
2. For project specific minimum width, refer to Special Contract Requirements, Section 156.
3. If signs will be in place more than 72 consecutive hours, use ground-mounted post.
4. Provide additional signs as required to meet field conditions. Additional signs will be determined my the CO.
5. Install construction signs on wood posts according to Part VI of the MUTCD Manual and detail W635-20, Sheet H.3.

FOOTNOTE:

1. Not shown on plans, use as required.

NPS Pkg. No. 101156A, B, C, &D NPS Drwg. Nos. 184/80251

TABULATION OF QUANTITIES/ADVANCED PROJECT SIGNING PLAN

--/---- Checked by:
--/---- Designed by:
23-FEB-2009 3:19PM
IP_PWP:dms04348\dena1027na.dgn [US_Sur2D]

STATE	PROJECT	SHEET NUMBER
AK	PRA DENA 10(27)	H.2

SIGN SPACING TABLE

ROAD TYPE	DISTANCE BETWEEN SIGNS IN FEET		
	A	B	C
Urban 40 MPH and less	100	100	100
Urban 45 MPH and greater	350	350	350
Rural	500	500	500
Expressway/Freeway	1000	1500	2640

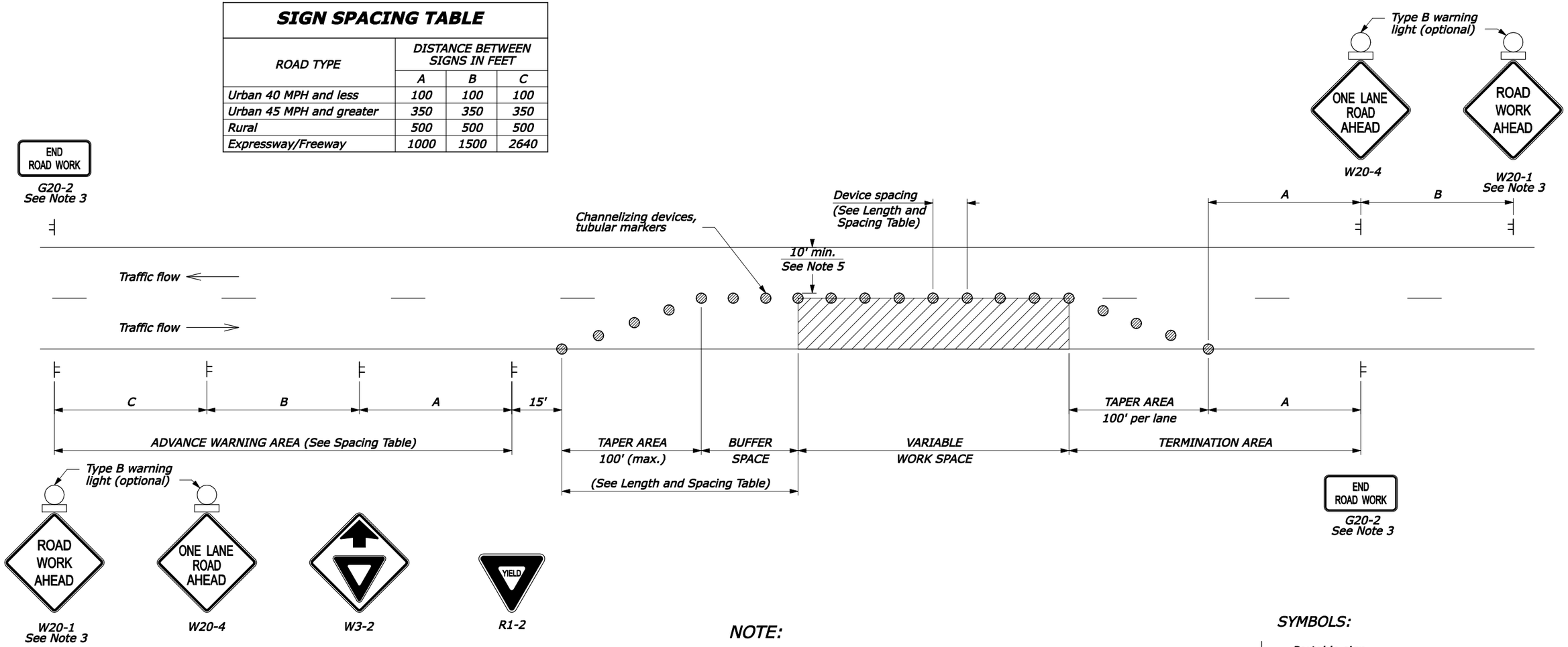

LENGTH AND SPACING TABLE

APPROACH SPEED*	LENGTH OF BUFFER SPACE	CHANNELIZING DEVICE		
		TAPER AREA	BUFFER SPACE	WORK SPACE
MPH	FEET	SPACING IN FEET		
25	155	20	50	50
30	200	20	60	60
35	250	20	70	70
40	305	20	80	80
45	360	20	90	90
50	425	20	100	100
55	495	20	110	110

* Approach speed based on the regulatory posted speed, not the advisory speed.

NOTE:

1. Use this layout only if sufficient gaps in oncoming traffic exist for traffic that must yield, and if drivers from both directions are able to see approaching traffic through and beyond the work site.
2. Final location and spacing of signs and devices may be changed to fit field conditions as approved by the CO.
3. If lane closure is completely within the project limits, eliminate the "ROAD WORK AHEAD" (W20-1) and "END ROAD WORK" (G20-2) signs.
4. For project specific minimum width, refer to Special Contract Requirements, Section 156.
5. Do not allow equipment, materials, or vehicles to be parked or stored in the buffer space.
6. If signs will be in place more than 72 consecutive hours, use ground-mounted post.
7. Provide additional signs as required to meet field conditions. Additional signs will be determined my the CO.
8. Install construction signs on wood posts according to Part VI of the MUTCD Manual and detail W635-20, Sheet H.3.

SYMBOLS:

- Portable sign
- Post mounted
- W8-1 MUTCD No.
- Channelizing Device

NPS Pkg. No. 101156A, B, C, &D NPS Drwg. Nos. 184/80251

TEMPORARY TRAFFIC CONTROL PLAN

IP_PWP:dms0434$\dena1027nb.dgn [US_Sur2D] 23-FEB-2009 3:20PM Designed by: Checked by:

STATE	PROJECT	SHEET NUMBER
AK	PRA-DENA 10(27)	H.3

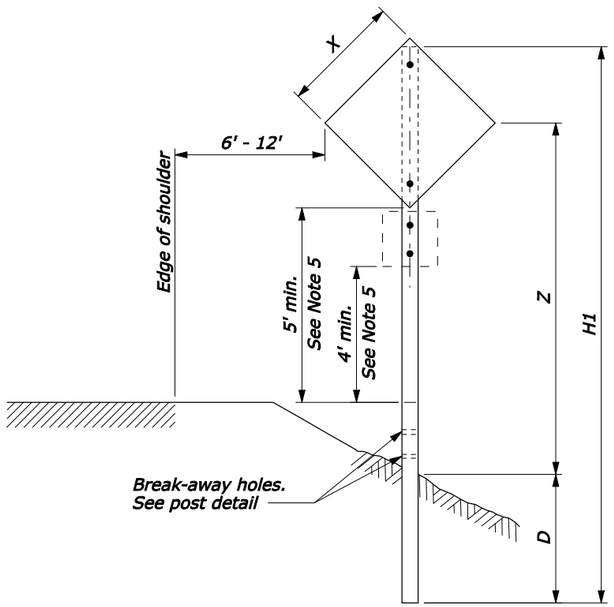

SINGLE POST SIGN

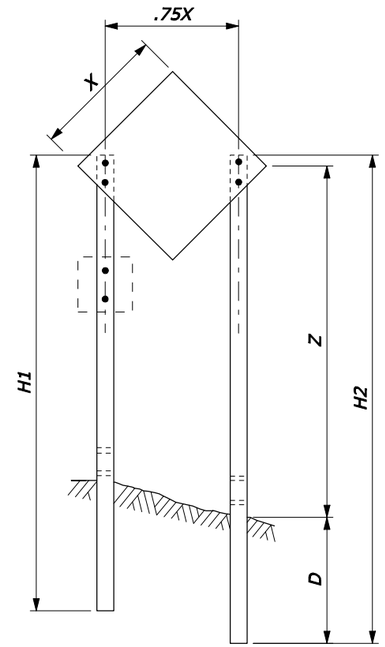

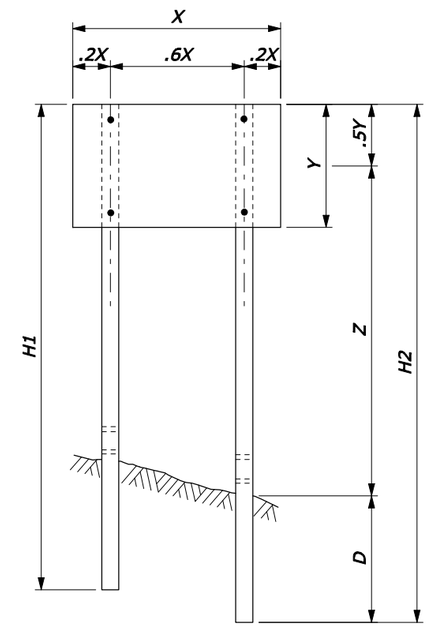

TWO POST SIGN

NOTE:

1. Attach sign panels with a minimum of 2 - ¼" dia. bolts per post.
2. Mount signs smaller than listed on a single 4" x 4" post. For signs not shown, use next largest size.
3. H1 and H2 = Overall post length. Select post lengths to fit field conditions.
4. D = Post embedment depth for average soil conditions.
5. When pedestrians are present, or in areas where the view obstructed, use 7' minimum mounting height.

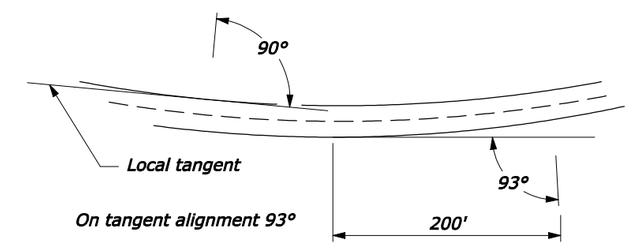

SIGN INSTALLATION ANGLE

WOOD POST SELECTION TABLE

SIGN SHAPE	X x Y	GROUNDLINE TO CENTER OF SIGN HEIGHT (Z)									
		Z IS 10' OR LESS					Z IS GREATER THAN 10'				
		NUMBER OF POSTS	POST SIZE	D	HOLE SIZE	NOTCH DEPTH	NUMBER OF POSTS	POST SIZE	D	HOLE SIZE	NOTCH DEPTH
◇ ⬡	30" x 30"	1	4" x 4"	36"	0	0	1 or 2	4" x 6" 4" x 4"	48" 36"	1½" 0	0 0
◇ ⬡ ⬡	36" x 36"	1 or 2	4" x 6" 4" x 4"	48" 36"	1½" 0	0 0	1 or 2	4" x 6" 4" x 4"	48" 36"	1½" 0	0 0
◇ ⬡	48" x 48"	1	4" x 6"	48"	1½"	0	1 or 2	6" x 8" 4" x 6"	48" 48"	3" 1½"	0 1¾"
▭	60" x 30"	2	4" x 4"	36"	0	0	2	4" x 6"	48"	1½"	1¾"
▭	78" x 42"	2	4" x 6"	48"	1½"	1¾"	2	4" x 6"	48"	1½"	1¾"
▭	96" x 48"	2	4" x 6"	48"	1½"	1¾"	2	6" x 8"	48"	3"	2¼"

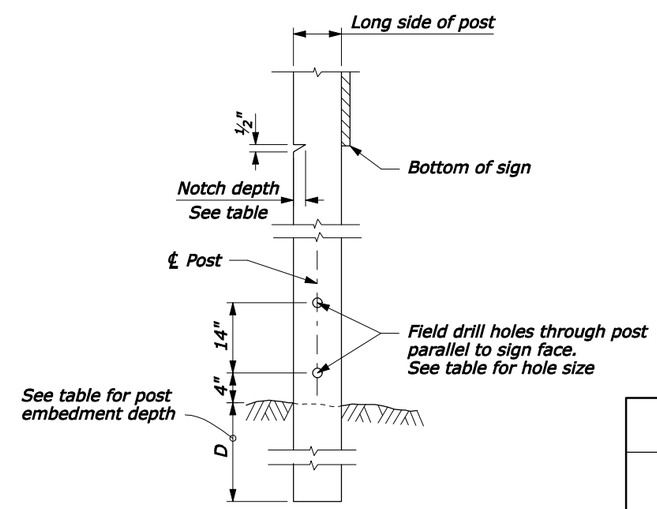

POST DETAIL

NO SCALE

U.S. DEPARTMENT OF TRANSPORTATION
FEDERAL HIGHWAY ADMINISTRATION
WESTERN FEDERAL LANDS HIGHWAY DIVISION

U.S. CUSTOMARY DETAIL

CONSTRUCTION SIGN INSTALLATION WOOD POSTS

DETAIL APPROVED FOR USE 12/2006

REVISED:

DETAIL W635-20

23-FEB-2009 5:08PM

IP_PWP:dms04348\dena1027nc.dgn [US Customary]